1

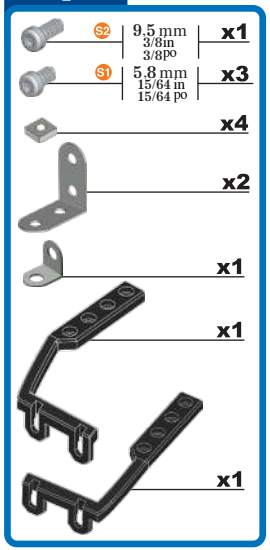
S2
9.5 mm
3/8in
3/8po
x1
S1
5.8 mm
15/64 in
15/64 po
x3
x4
x2
x1
x1
x1

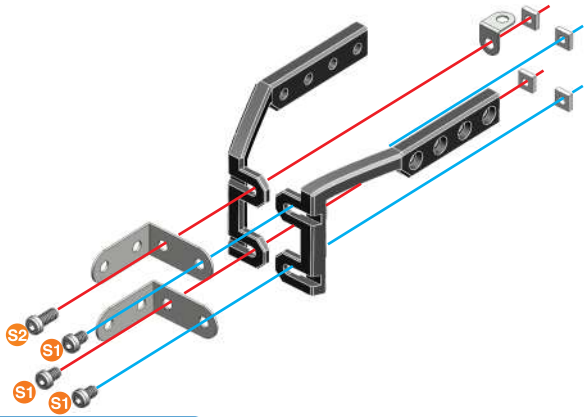
S2
S1
S1
S1

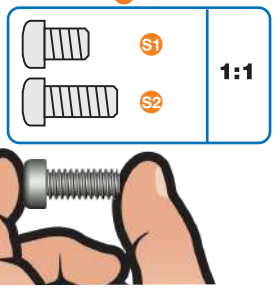
S1
S2
1:1

2

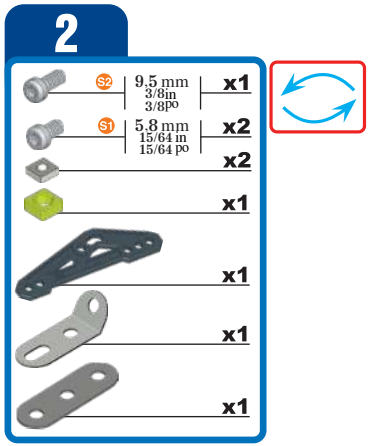
S2
9.5 mm
3/8in
3/8po
x1
S1
5.8 mm
15/64 in
15/64 po
x2
x2
x1
x1
x1
x1

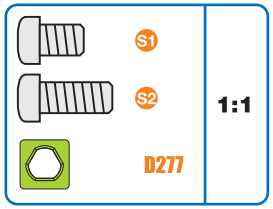
S1
S2
1:1
D277

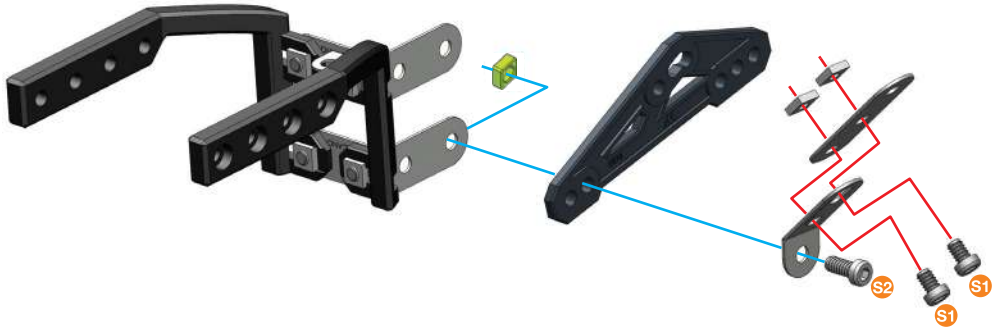
S2
S1
S1

3

S3 | 12 mm 1/2 in 1/2 po | x1
S1 | 5.8 mm 15/64 in 15/64 po | x2
x3
x1
x1
x1

S1
S3
A338
1:1

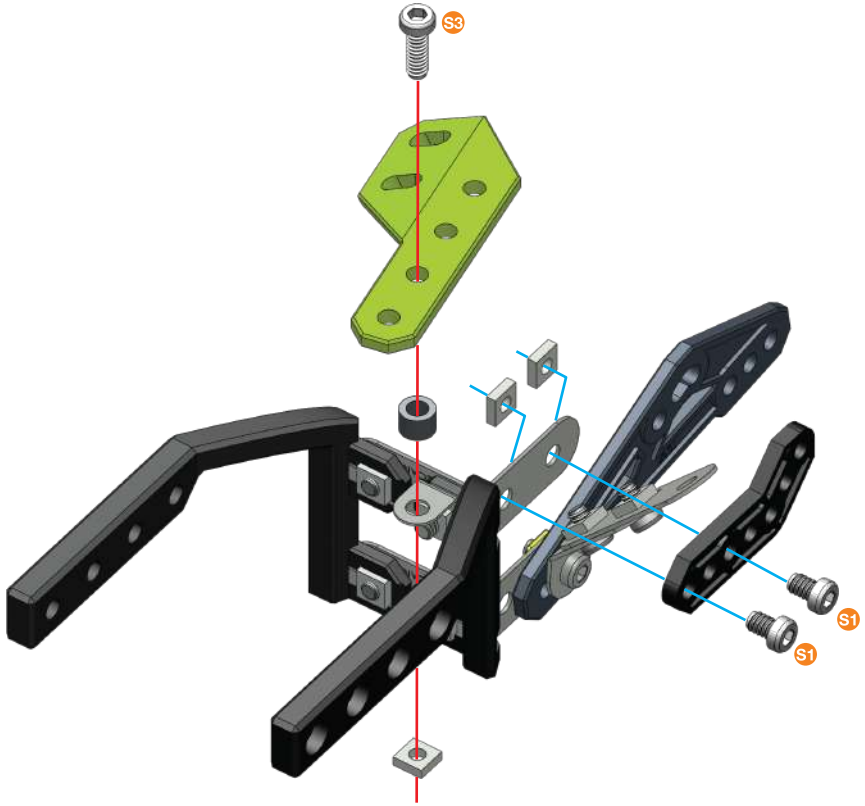

4

x1
x1
x1

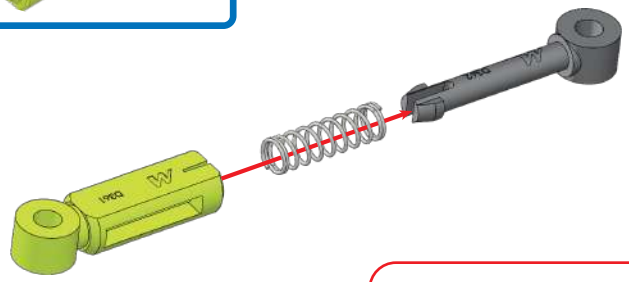

5

3+4+

B1 | 14.7 mm 37/64 in 37/64 po | x2
x2
x2

B1
D277
1:1

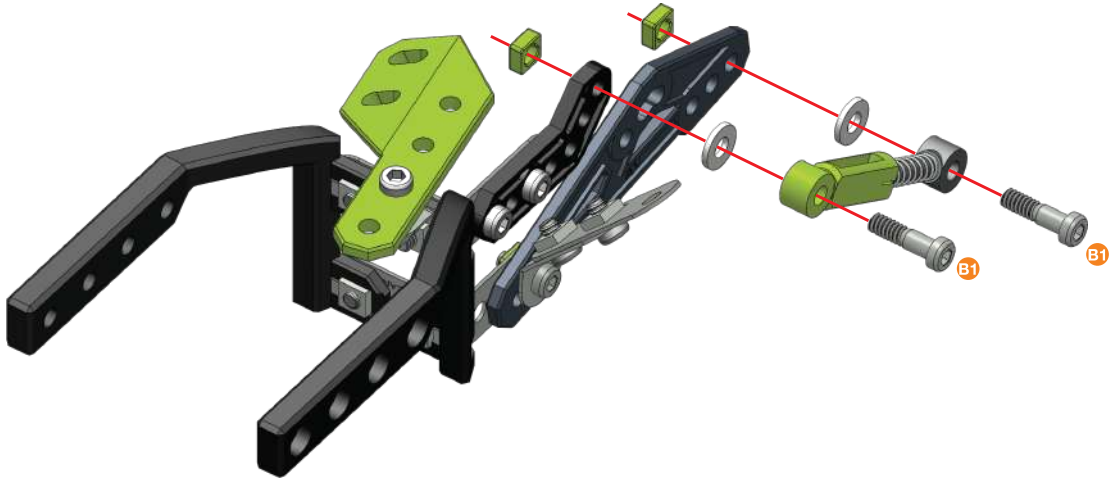

6

S2 | 9.5 mm 3/8in 3/8po | x2
x2
x1
x1
S2 | 1:1

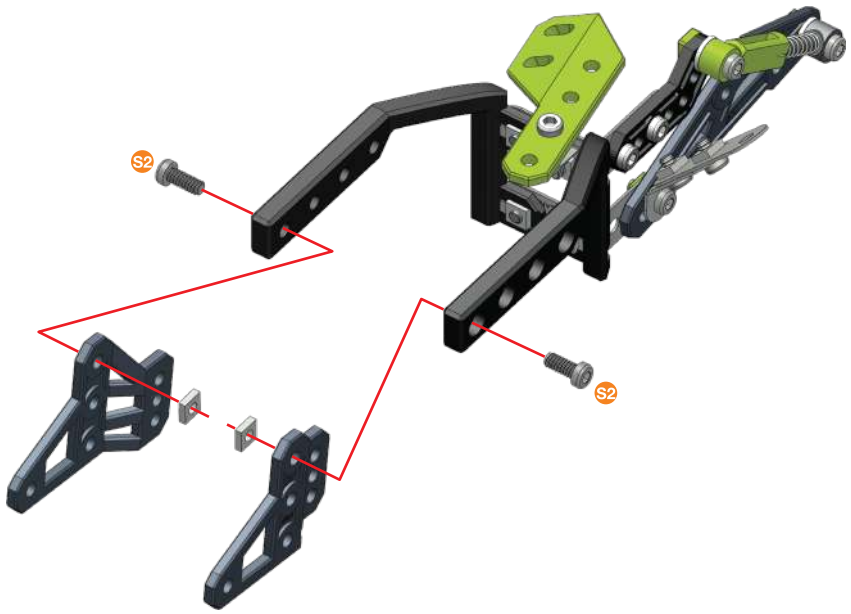

7

B1 | 14.7 mm 37/64in 37/64po | x2
x2
x2
x1
x1
B1 | 1:1

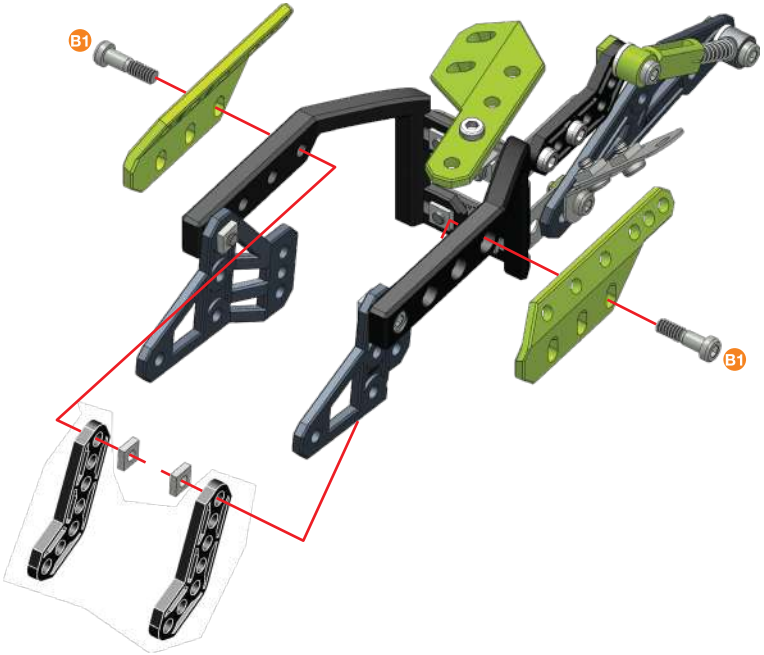

8

S3 | 12 mm 1/2in 1/2po | x2
x2
x4
S3 | 1:1

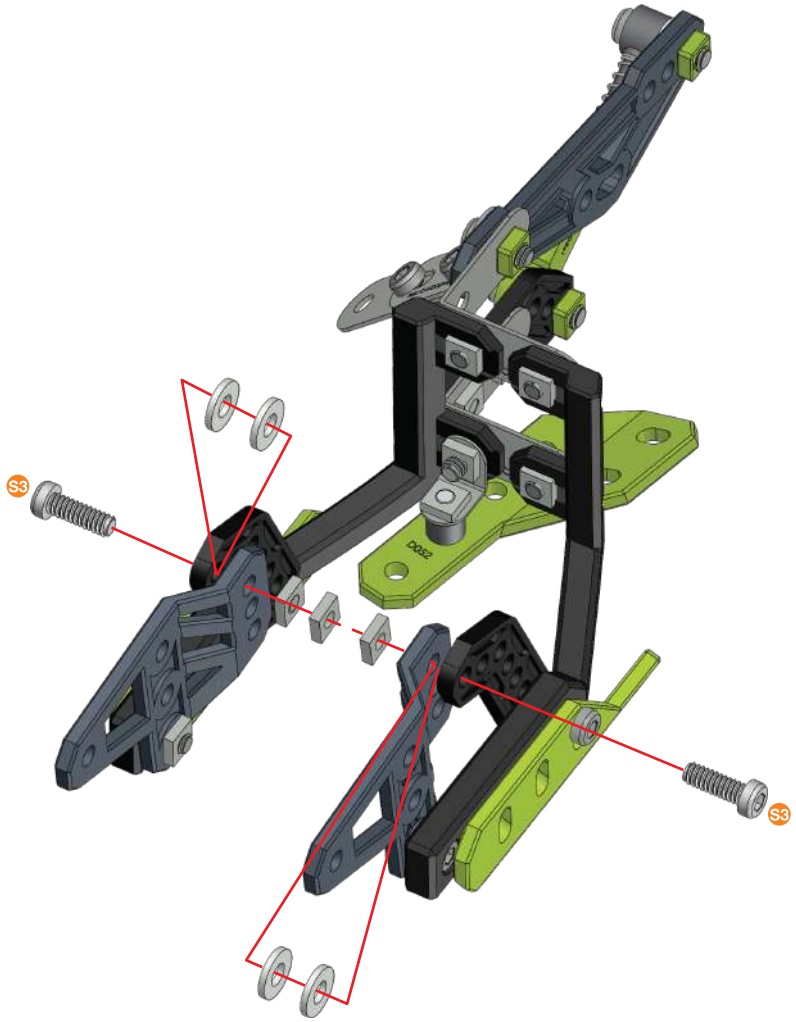

9

S3 | 12 mm 1/2 in 1/2 po | x4

x4

S3 | 1:1

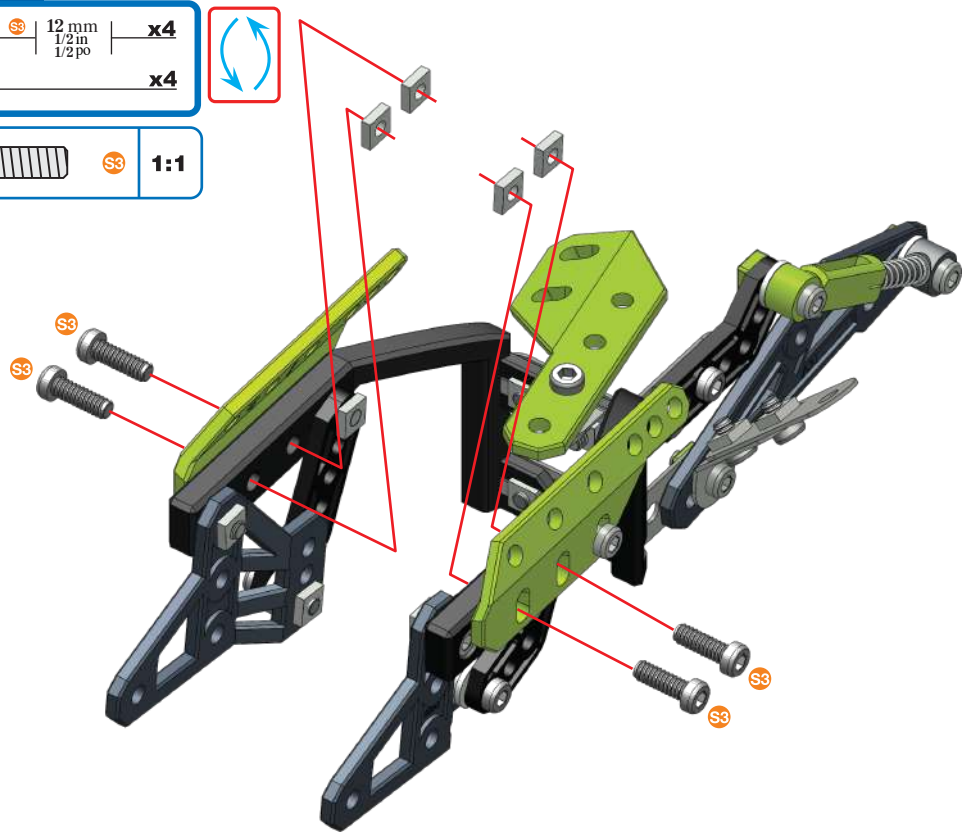

10

B1 | 14.7 mm 37/64 in 37/64 po | x4

x2

x2

x2

B1 | A338 | 1:1

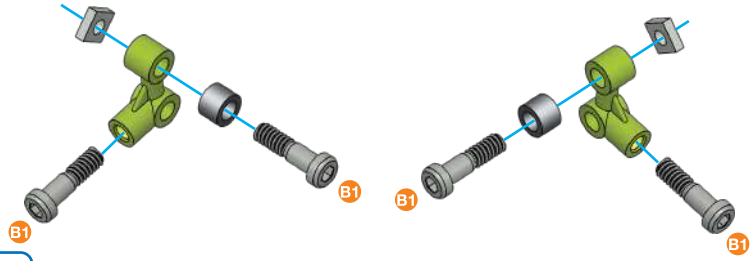

11 ⑨+⑩+

B1 | 14.7 mm 37/64 in 37/64 po | x2

x2

B1 | 1:1

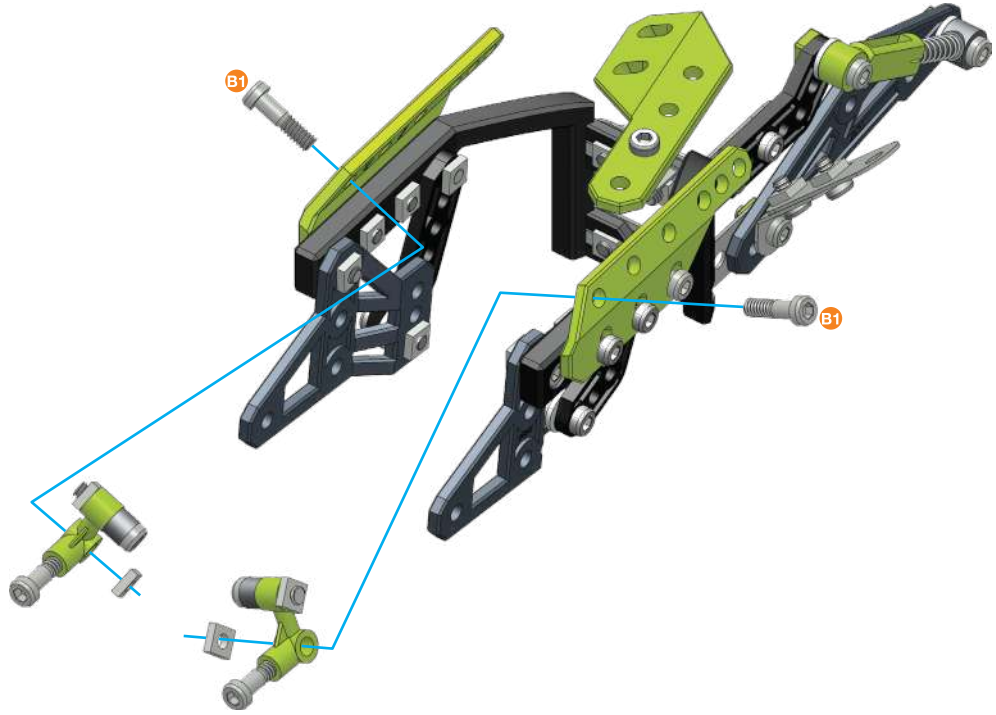

12

x2

x2

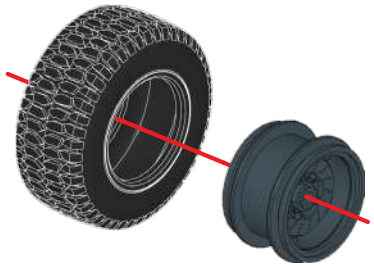

x2

13 ⑪+⑫+

75 mm / 2 15/16in / 2 15/16po — x1

x2

x2

x2

x2

A238

A338

1:1

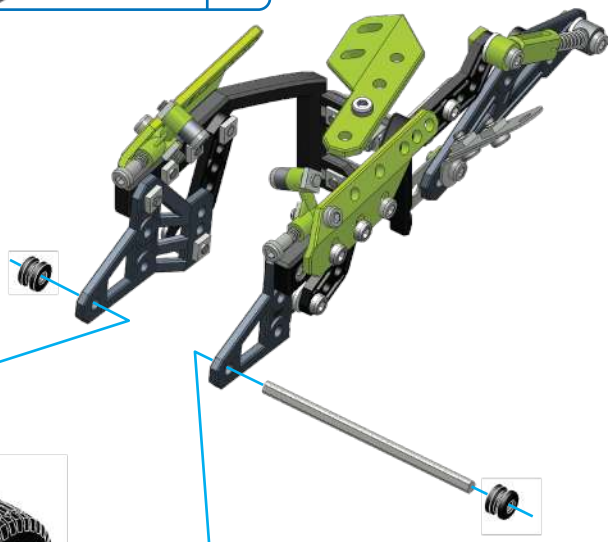

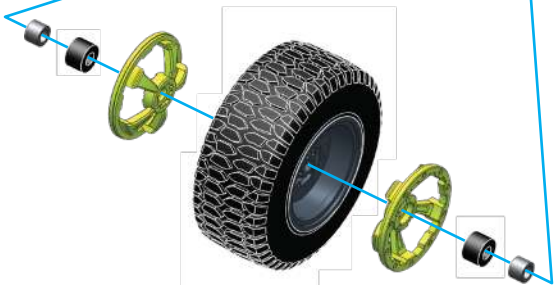

1:1

14 ⑫+⑬+

28 mm / 1 1/8in / 1 1/8po — x1

x1

x1

x2

x1

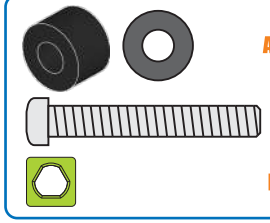

A238

D277

1:1

1

x1

x2

x2

x1

x1

S1 5.8 mm 15/64 in 15/64 po — x1

S2 9.5 mm 3/8 in 3/8 po — x2

x2

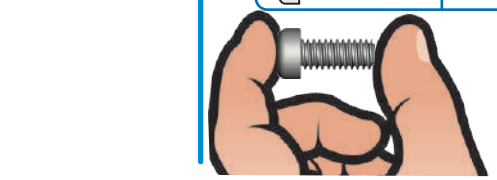

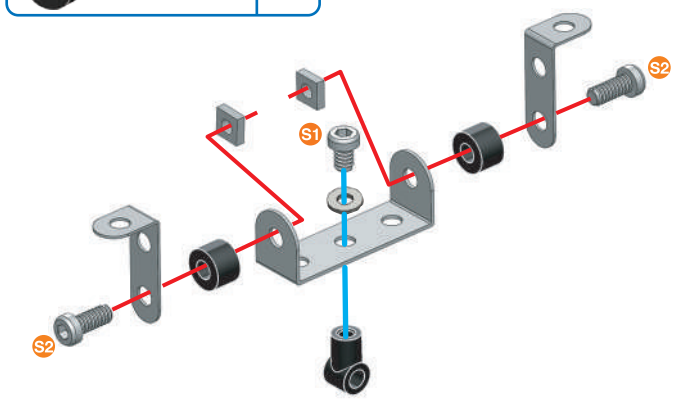

2

x1

x2

x2

S1 5.3 mm 15/64 in 15/64 po — x4

x4

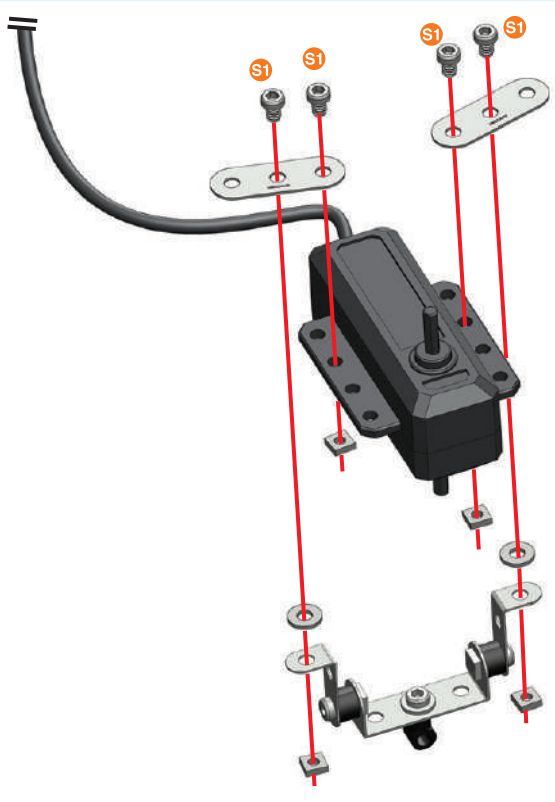

3

x2

x4

B2 19 mm 3/4 in 3/4 po — x2

x2

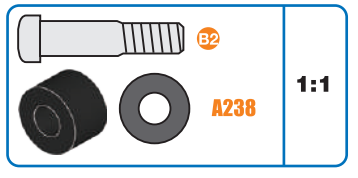

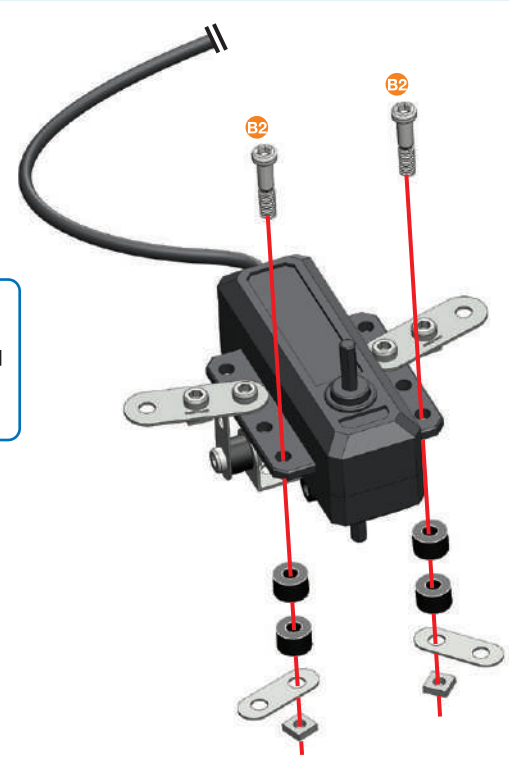

4

x2

x2

S2 | 9.5 mm 3/8in 3/8po | x4

x4

S2 — 1:1

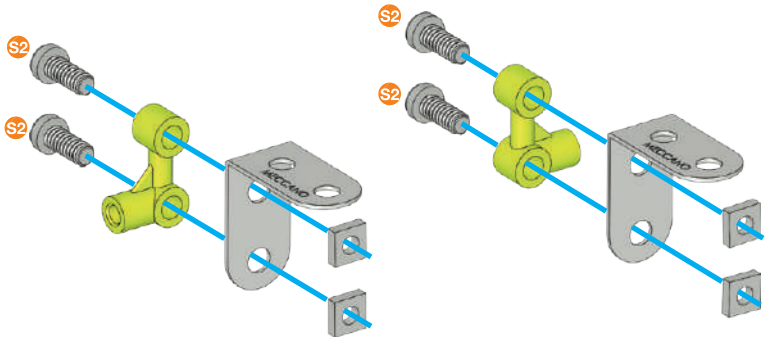

5

x1

x2

S2 | 9.5 mm 3/8in 3/8po | x2

x2

S2 — 1:1

D277

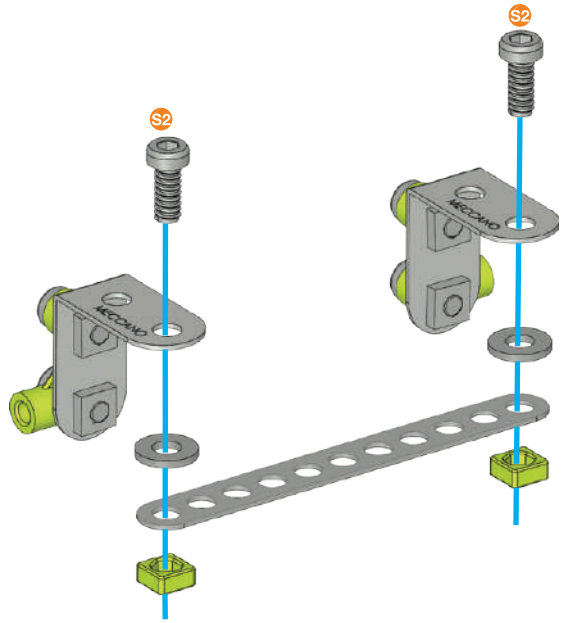

6 ③+⑤+

x2

S2 | 9.5 mm 3/8in 3/8po | x2

x2

S2 — 1:1

A338

D277

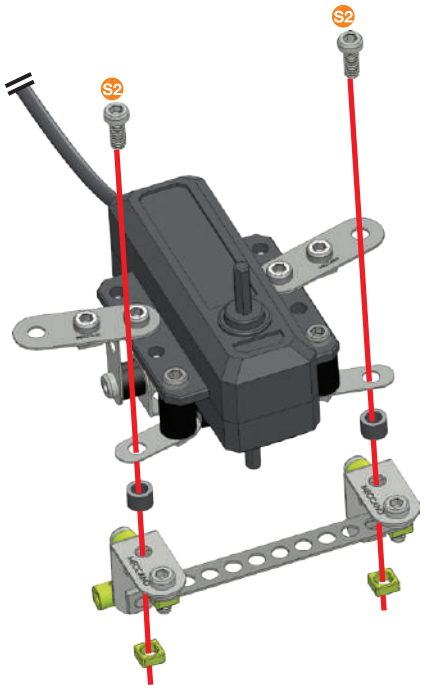

7

x6

x2

x1

S1 | 5.8 mm 15/64 in 15/64 po | x1

S2 | 9.5 mm 3/8in 3/8po | x2

x3

S1

S2 — 1:1

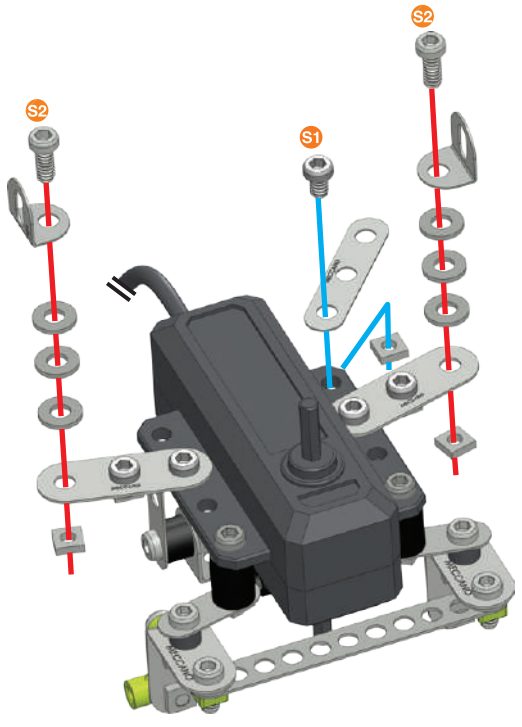

8

x1

x2

S2 | 9.5 mm / 3/8in / 3/8po | x2

x2

S2 | 1:1

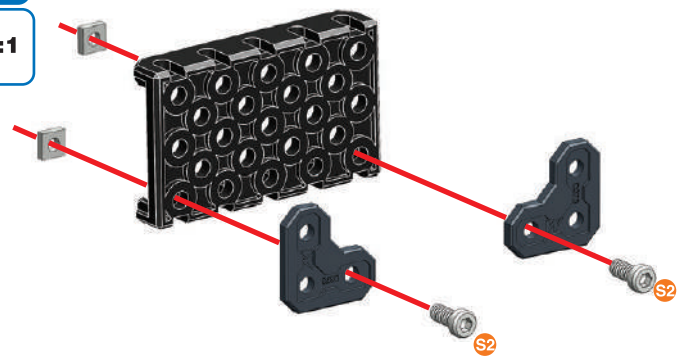

9

x1

x1

x2

S2 | 9.5 mm / 3/8in / 3/8po | x4

x4

S2 | 1:1

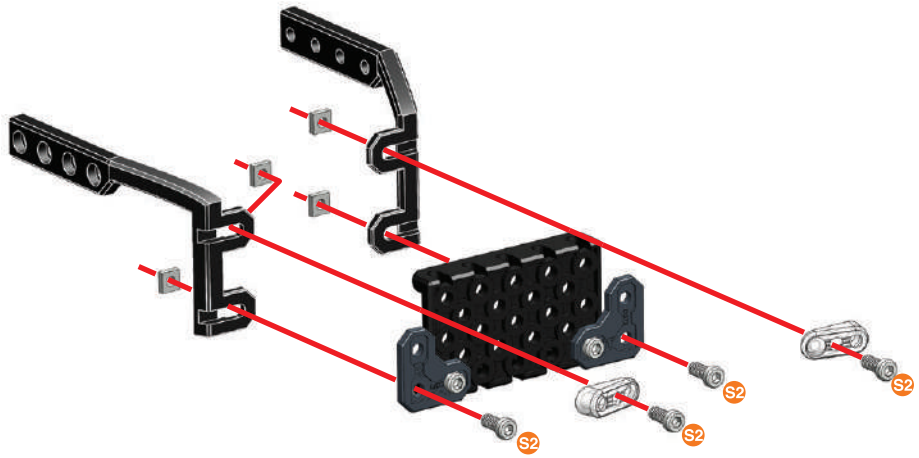

10

x2

S3 | 12 mm / 1/2 in / 1/2 po | x2

x2

S3 | 1:1

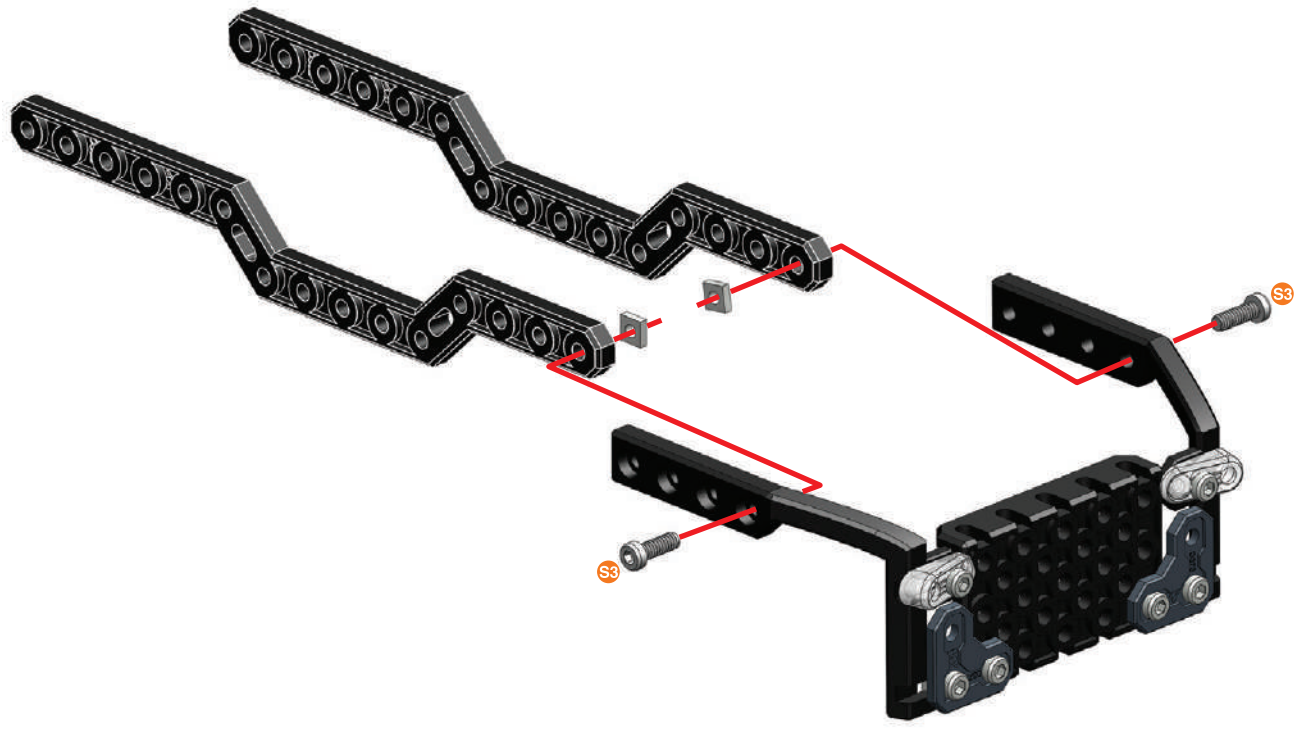

11 ⑦+⑩+

B1 | 14.7 mm / 37/64 in / 37/64 po | x2

x2

x2

B1 | 1:1

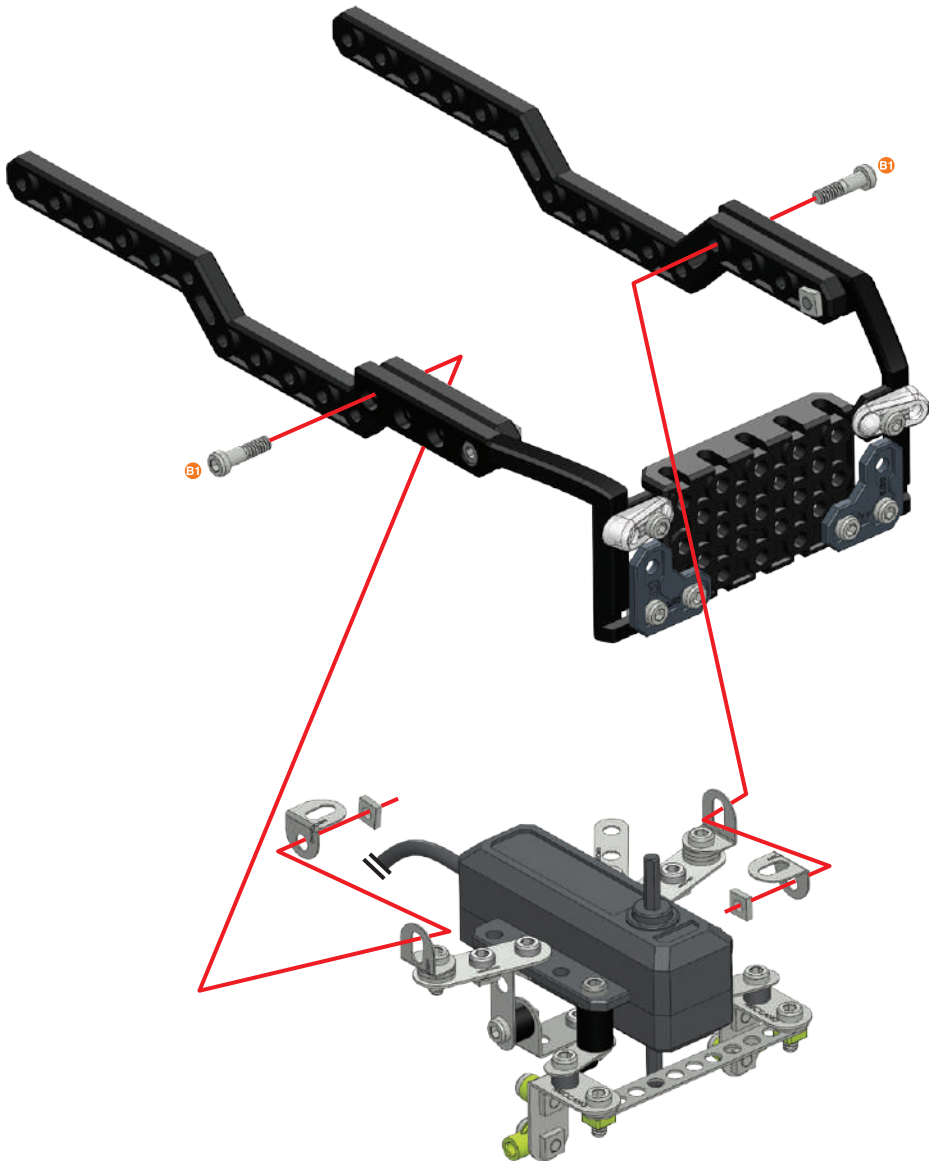

12

x2

S2 | 9.5 mm / 3/8 in / 3/8 po | x2

x2

S2 | 1:1

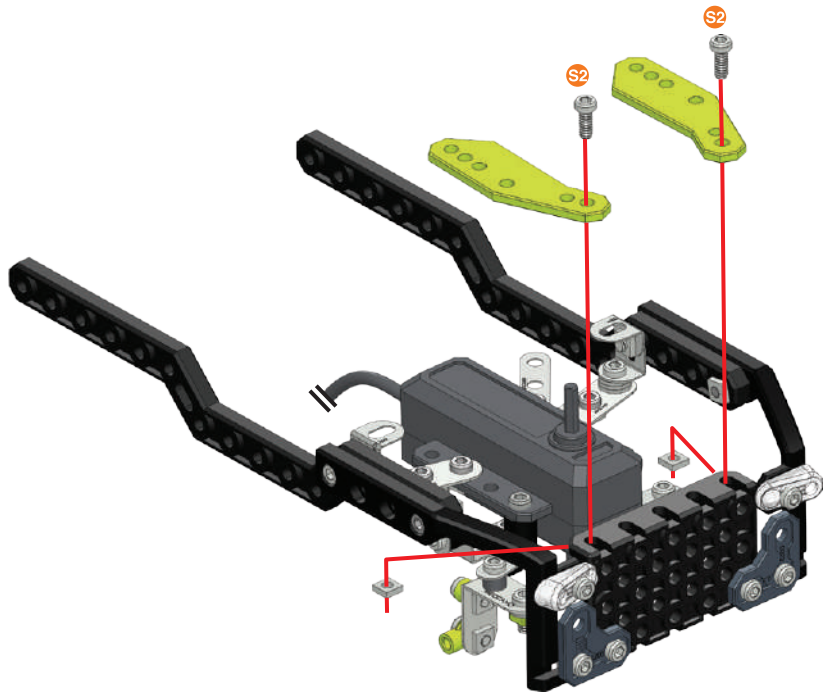

13

x1

x1

x1

x1

x4

B1 | 14.7 mm / 37/64 in / 37/64 po | x2

x2

B1 | 1:1

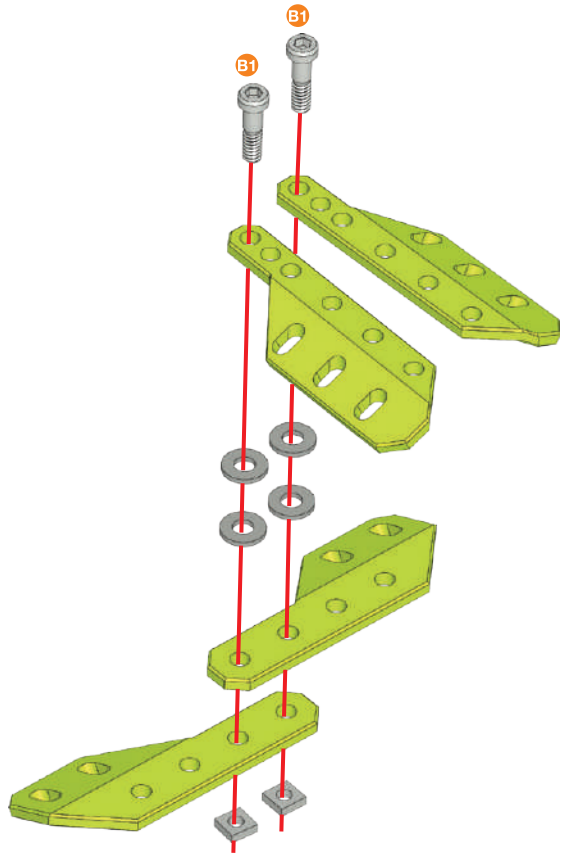

14 ⑫+⑬+

x2

S1 | 5.8 mm 15/64 in 15/64 po | x2

x2

S1 | 1:1

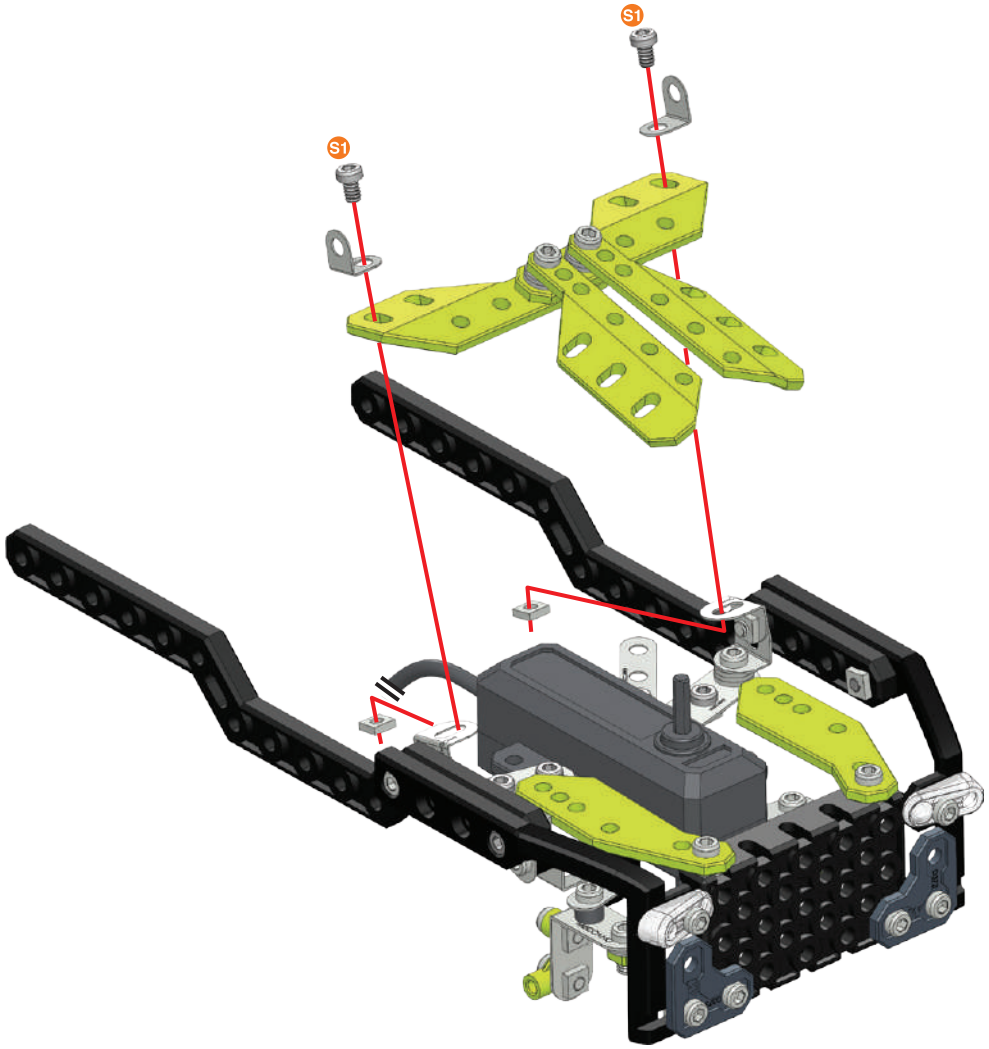

15

x2

x1

x1

x1

S2 | 9.5 mm 3/8 in 3/8 po | x2

S3 | 12 mm 1/2 in 1/2 po | x1

x2

S2
S3 | 1:1

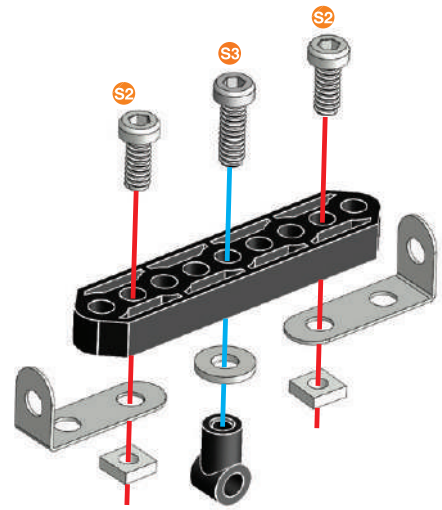

16

x1

x1

x2

S1 | 5.8 mm 15/64 in 15/64 po | x2

S2 | 9.5 mm 3/8 in 3/8 po | x2

x4

S1
S2 | 1:1

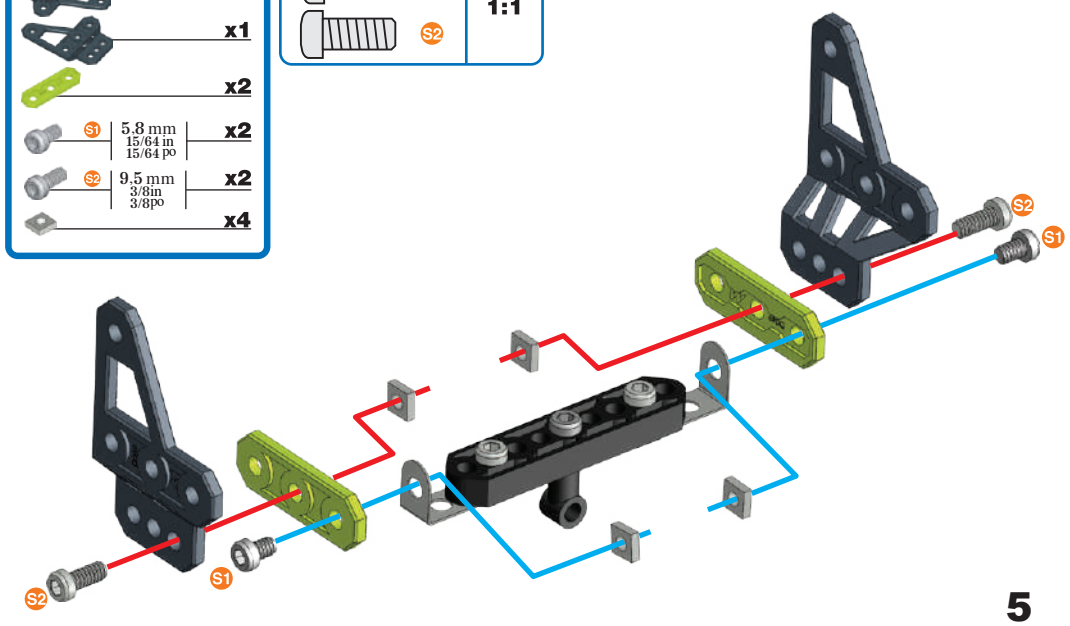

17

⑭ + ⑯ +

B1	14.7 mm 37/64 in 37/64 po	x4
		x4

B1 1:1

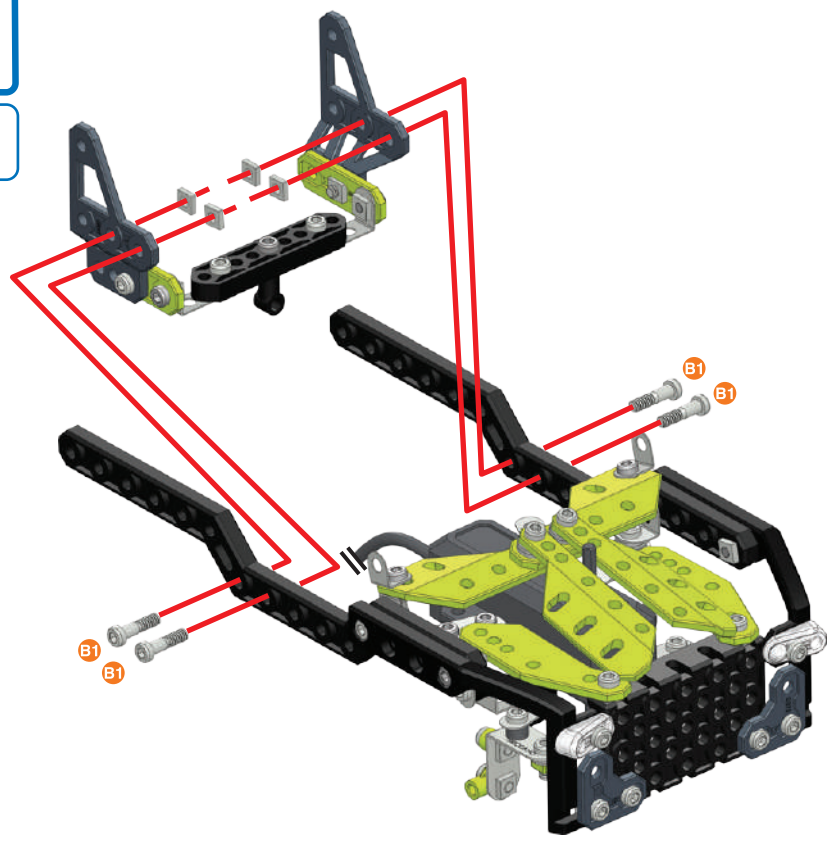

18

		x1
		x1
S6	28 mm 1 1/8 in 1 1/8 po	x1
		x1

S6 1:1

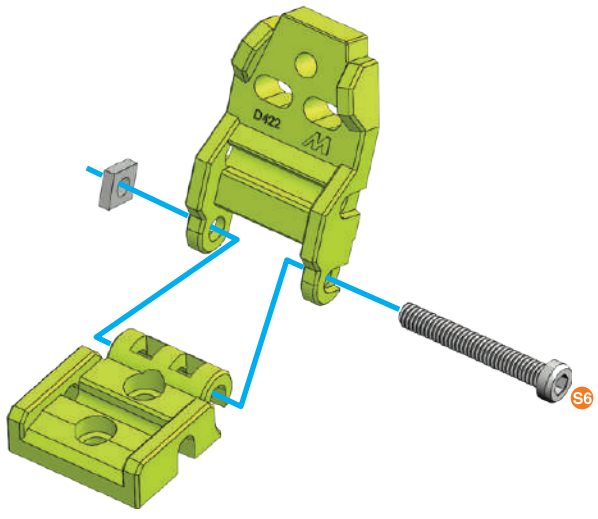

19

⑰ + ⑱ +

S1	5.8 mm 15/64 in 15/64 po	x1
		x1

S1 1:1

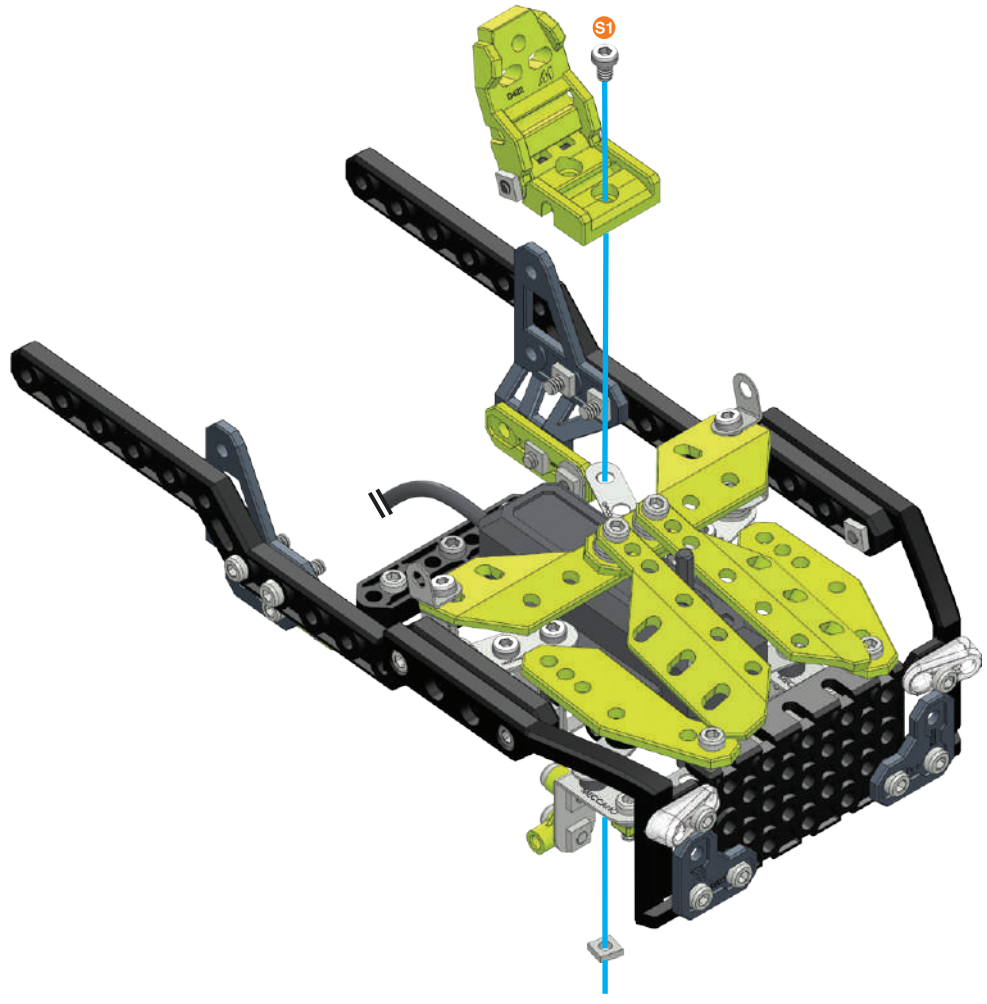

20

x2
x2
B1 | 14.7 mm | 37/64 in | 37/64 po — x2
x2

B1 — 1:1

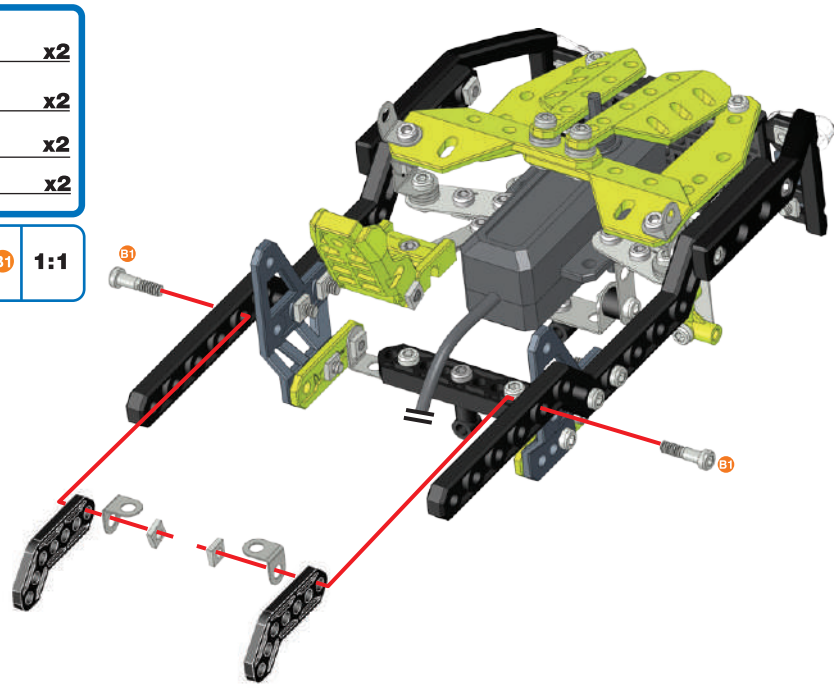

21

100 mm | 3 15/16 in | 3 15/16 po — x1
x1
x2
x1
x2

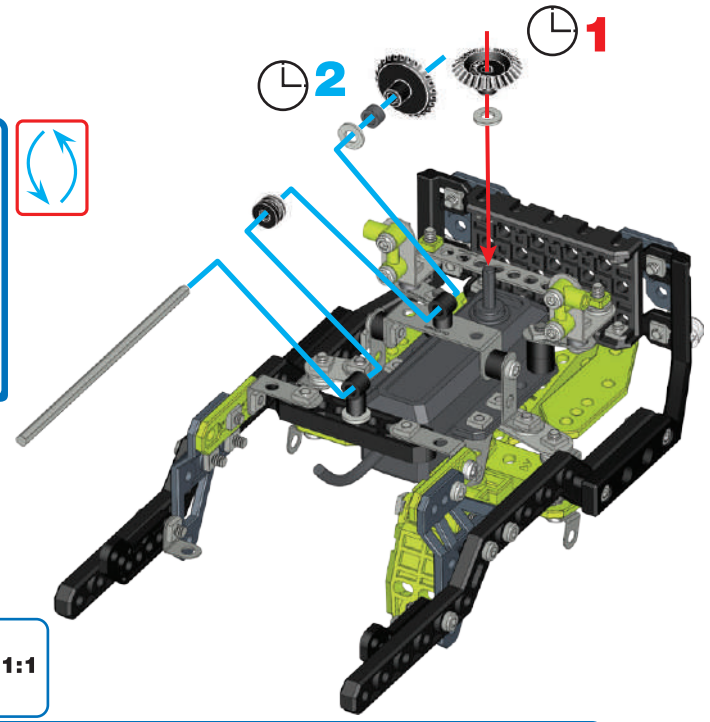

A338 — 1:1

1:1

22

x2
x2
x2

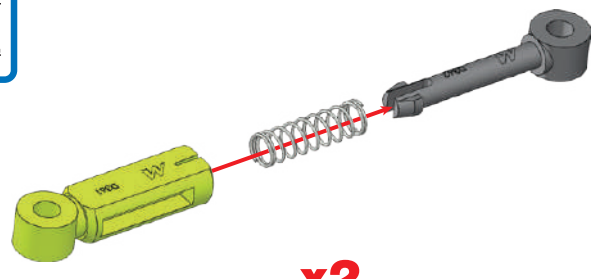

x2

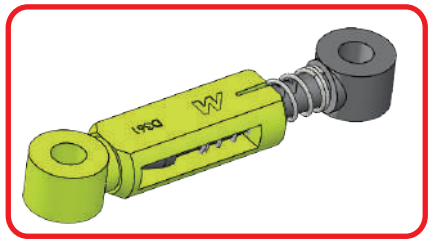

23 (21) + (22) +

x1
x2
B1 | 14.7 mm | 37/64 in | 37/64 po — x2
x2

B1
D277 — 1:1

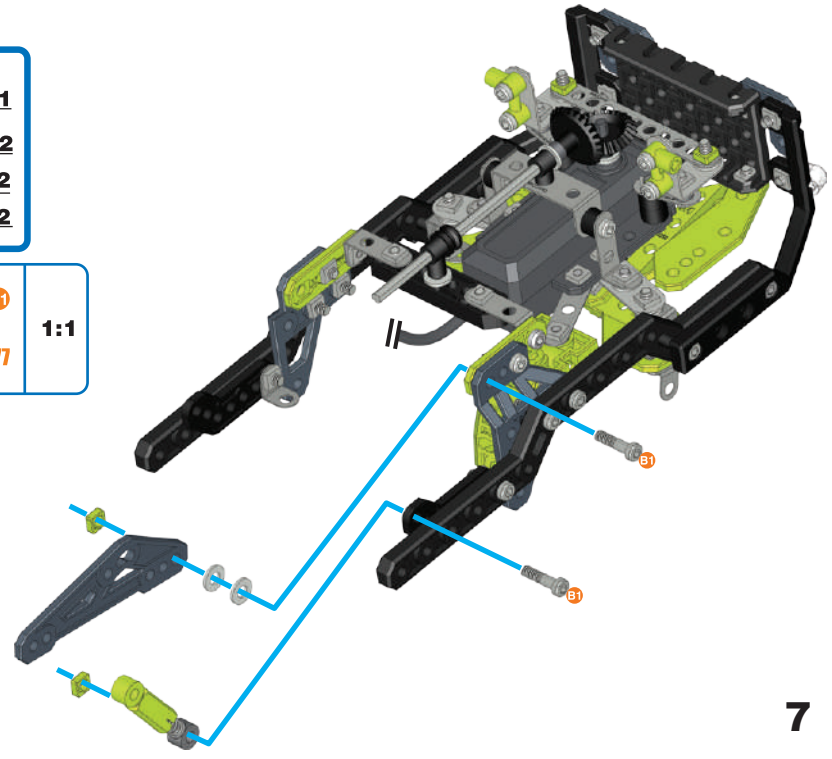

24

22 + 23 +

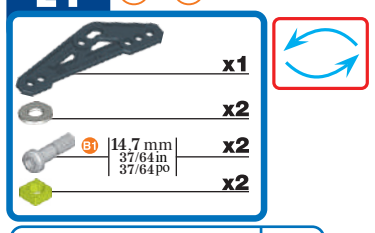

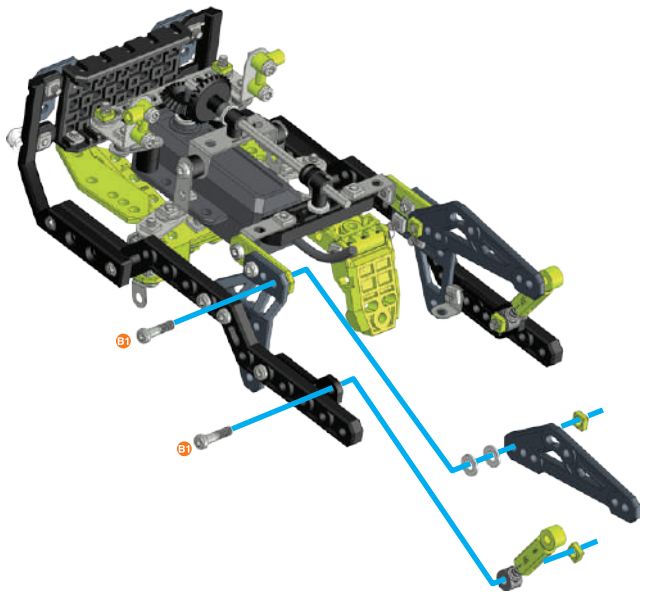

25

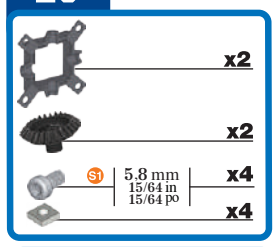

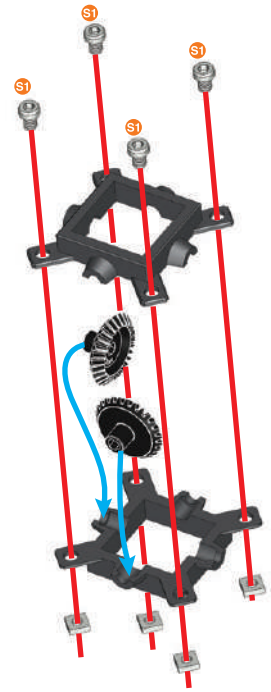

26

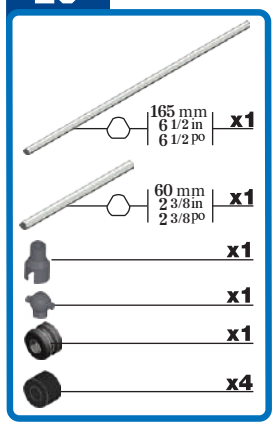

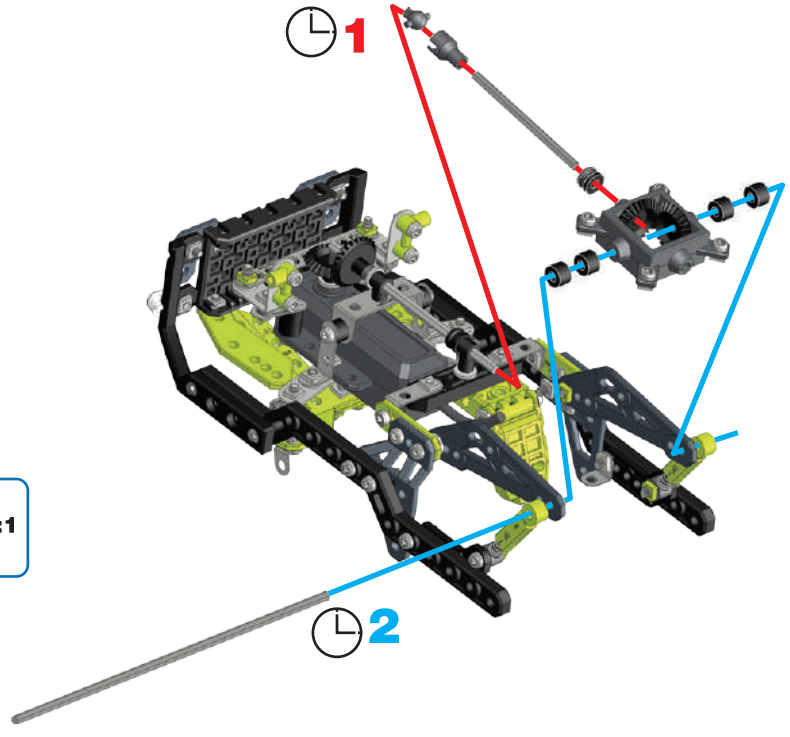

27

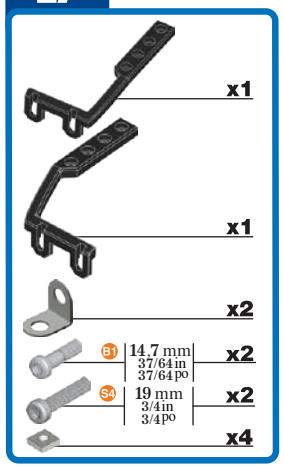

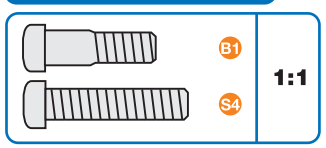

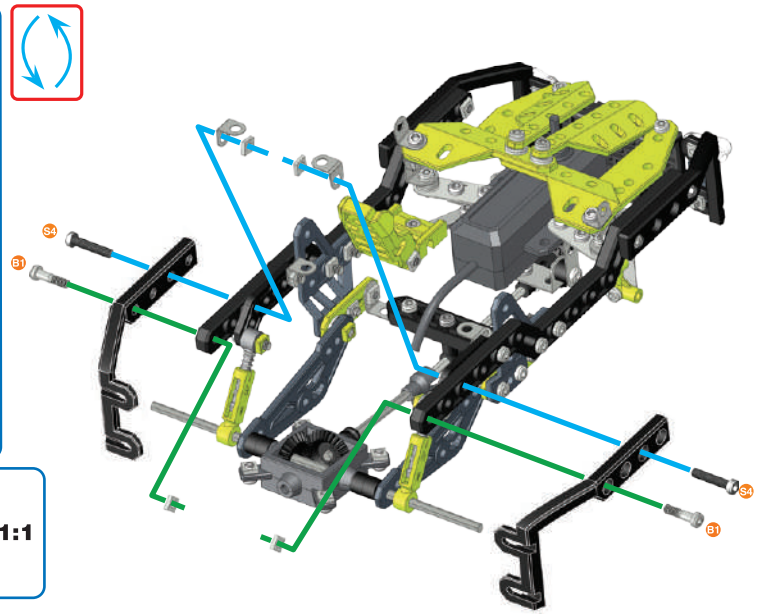

28

x1

S3 | 12 mm / 1/2 in / 1/2 po | x4

x4

S3 | 1:1

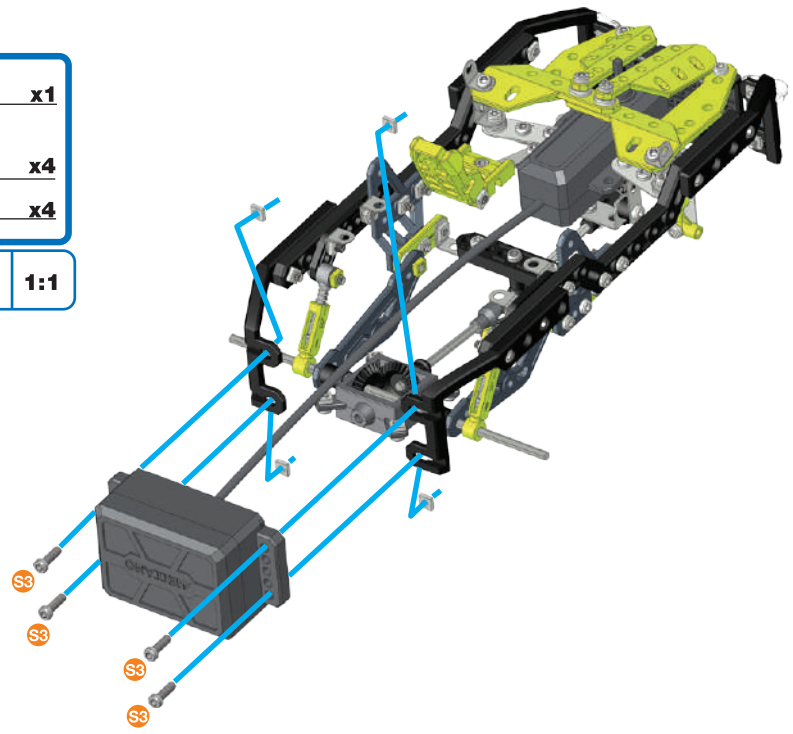

29

x2

S1 | 5.8 mm / 15/64 in / 15/64 po | x4

x4

S1 | 1:1

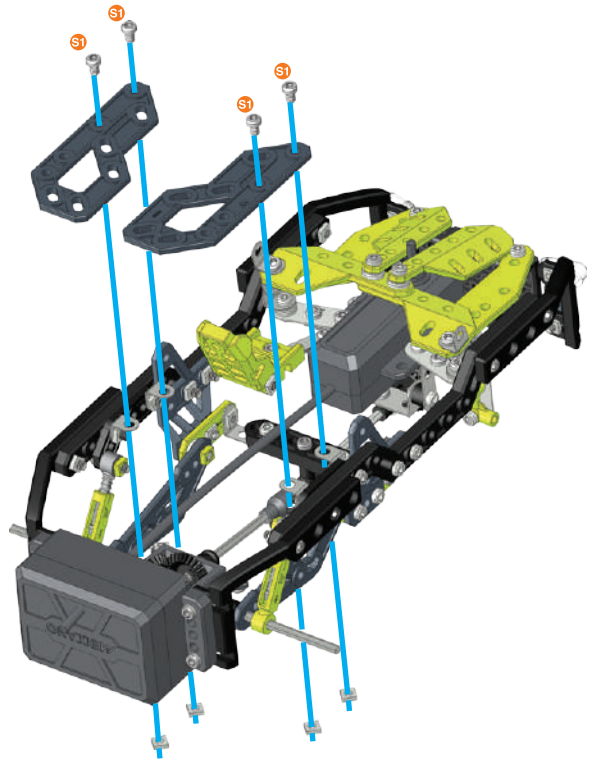

30

x2

S2 | 9.5 mm / 3/8 in / 3/8 po | x2

x2

S2 | 1:1

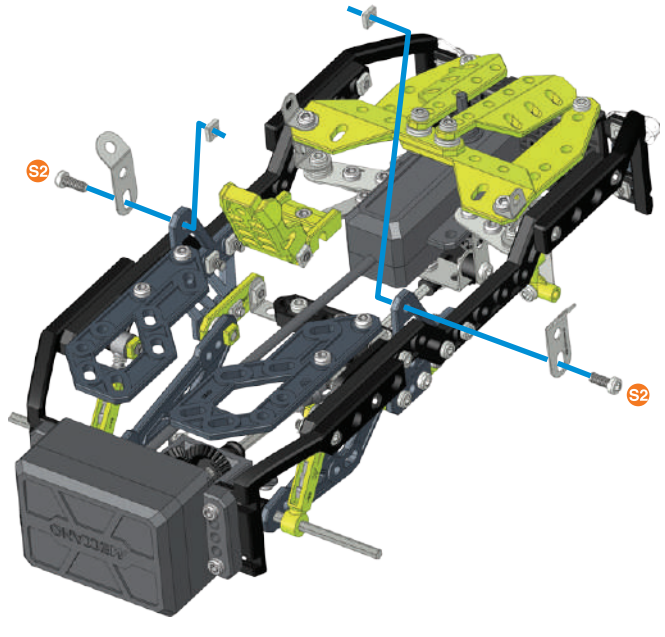

31

x2

S2 | 9.5 mm / 3/8 in / 3/8 po | x2

x2

S2 | 1:1

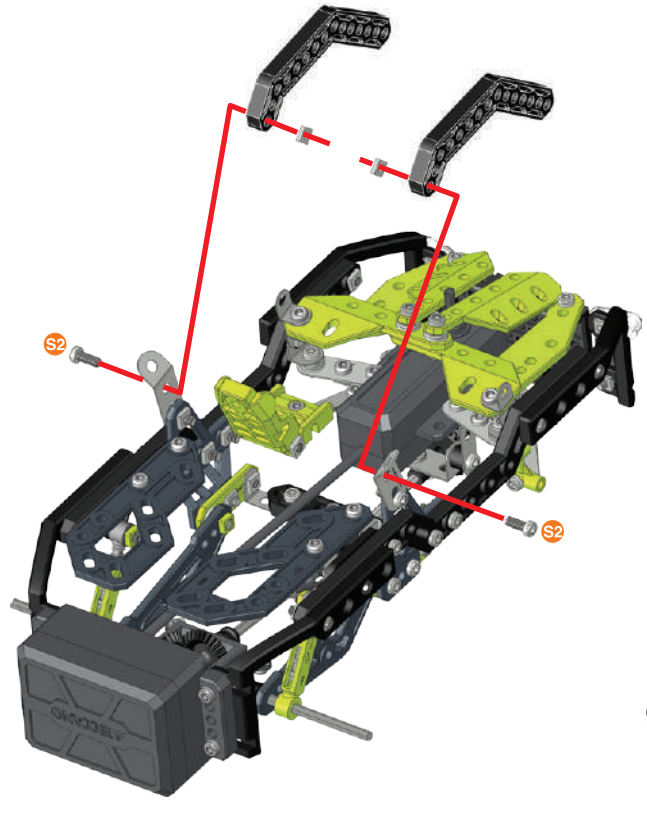

32

x2

x1

S1 5.8 mm 15/64 in 15/64 po x2

S2 9.5 mm 3/8in 3/8po x4

x6

S1 S2 1:1

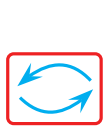

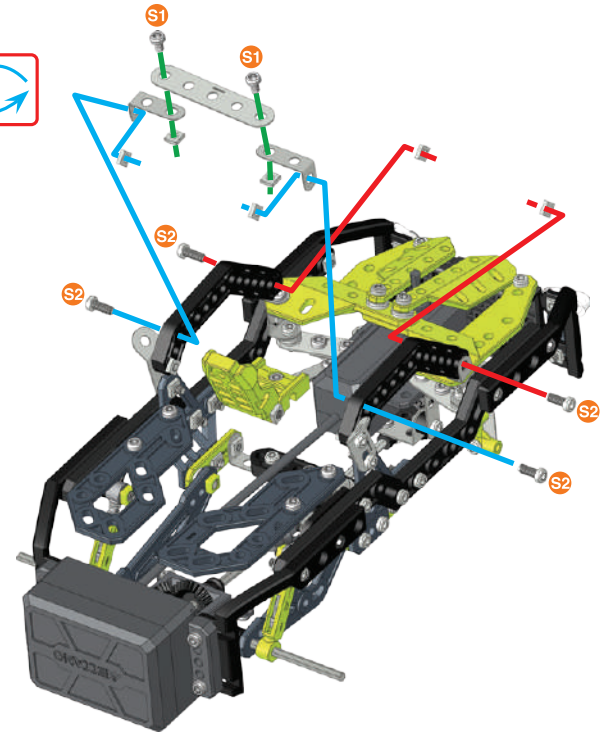

33

x4

x4

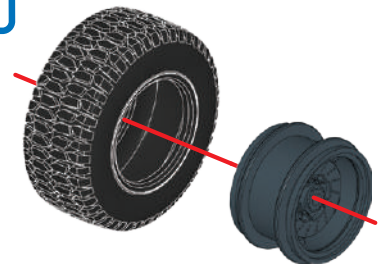

x4

34 (32)+(33)+

x2

x2

x4

A238 1:1

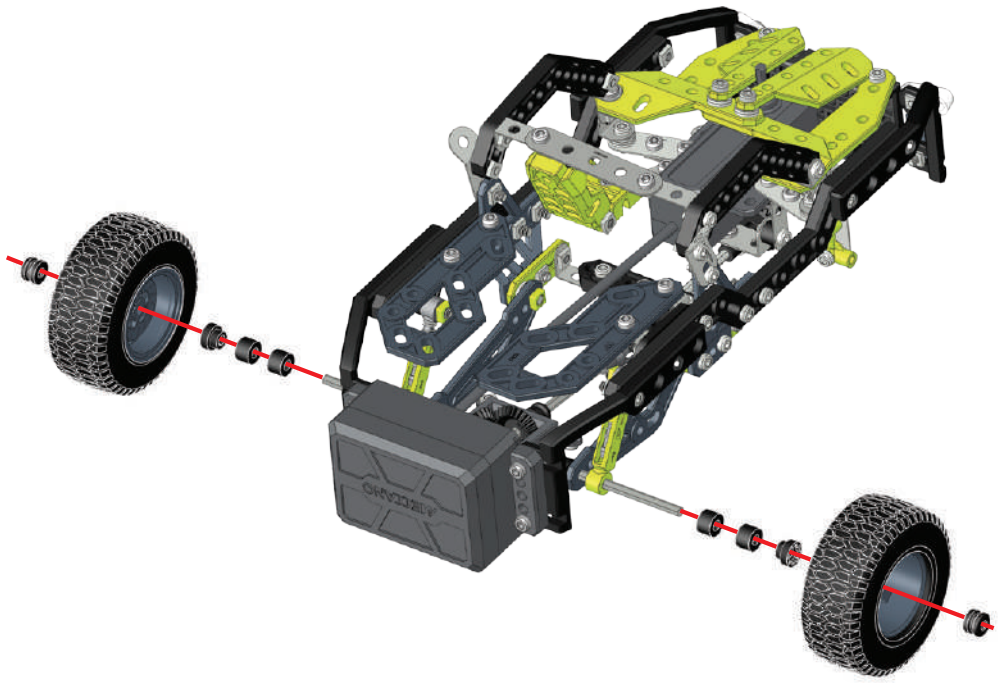

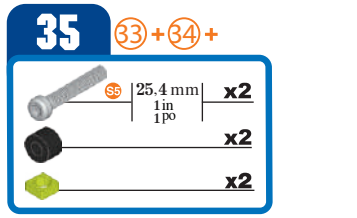
35
33 + 34 +
S5
25,4 mm
1 in
1 po
x2
x2
x2

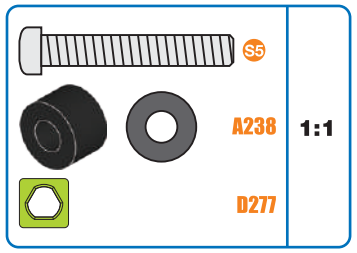
S5
A238
1:1
D277

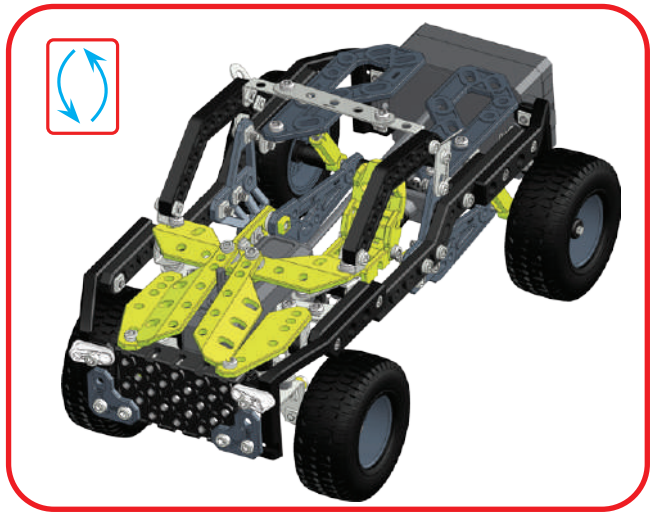

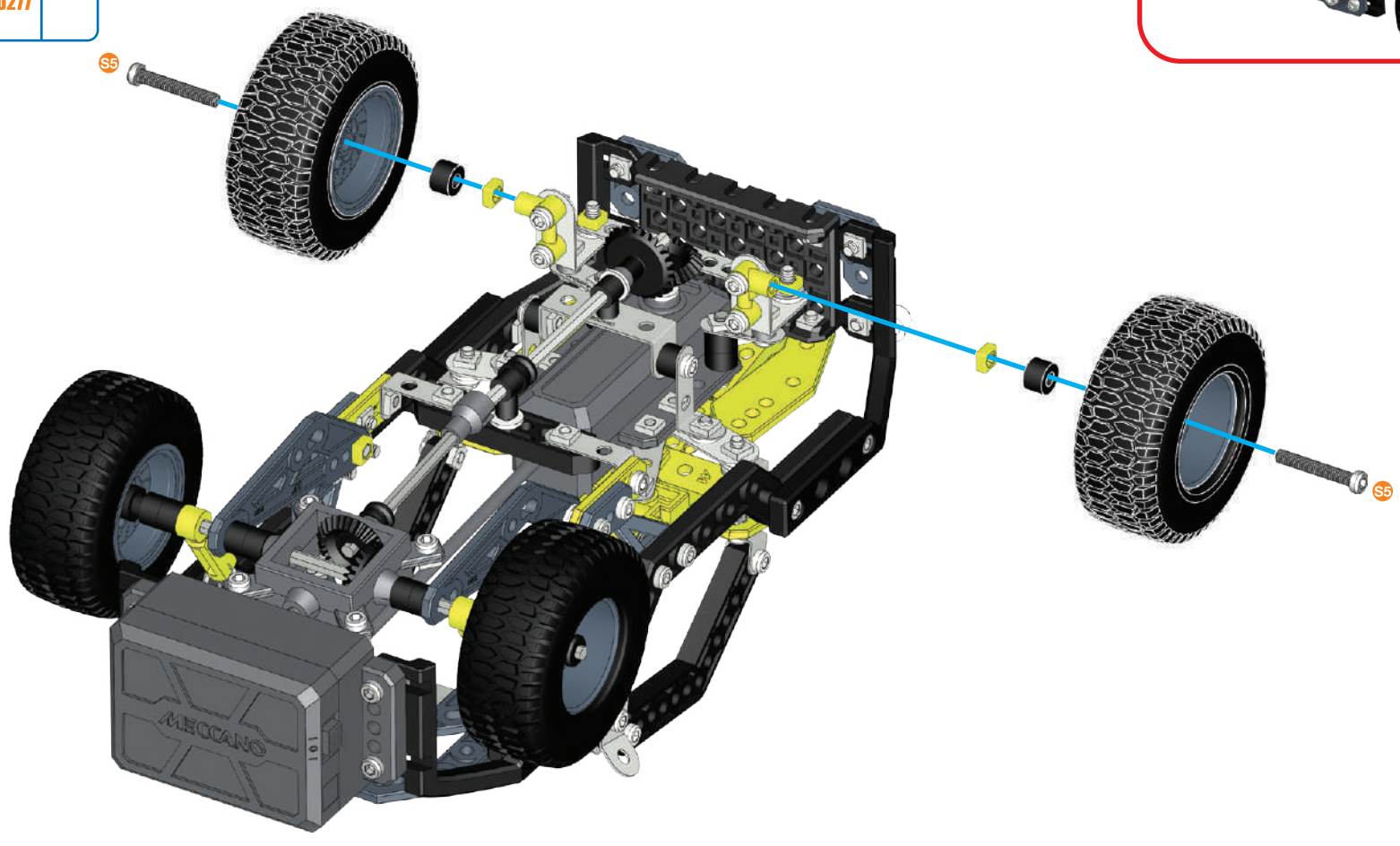
S5
S5
MECCANO

1

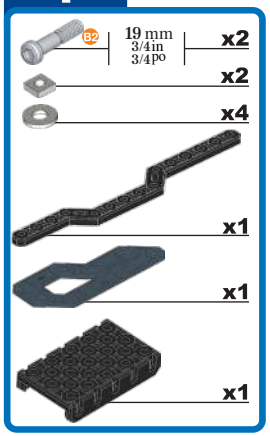
B2
19 mm
3/4 in
3/4 po
x2
x2
x4
x1
x1
x1

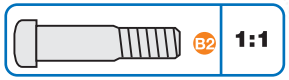
B2
1:1

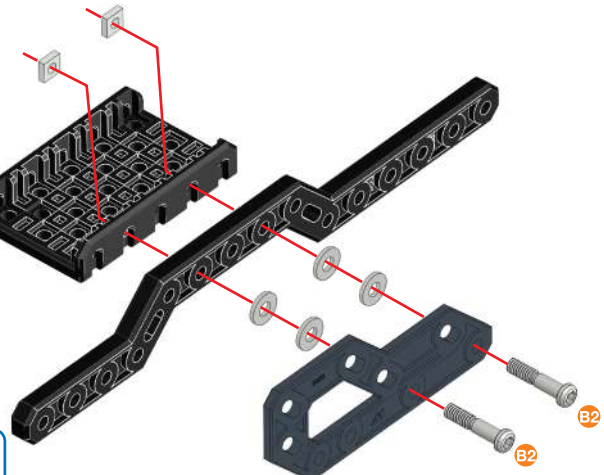
B2
B2

2

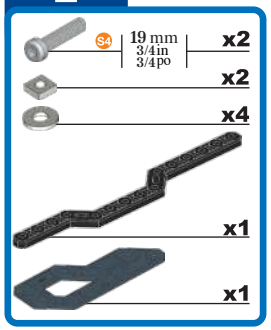
S4
19 mm
3/4 in
3/4 po
x2
x2
x4
x1
x1

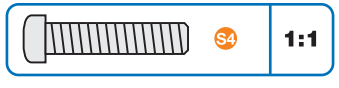
S4
1:1

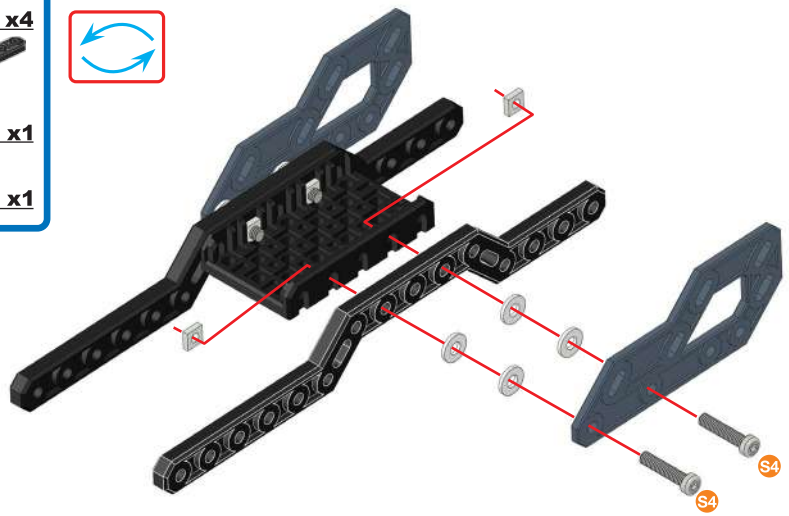
S4
S4

3

S3
12 mm
1/2 in
1/2 po
x4
x4
x2

S3
1:1

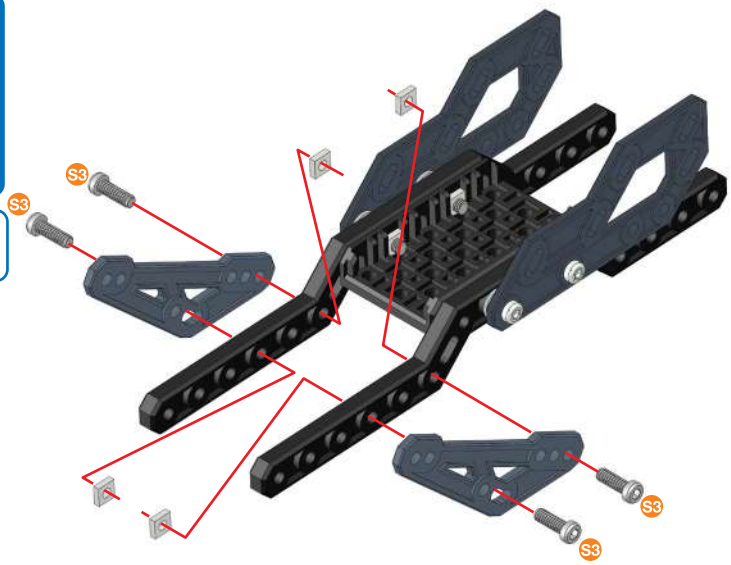
S3
S3
S3
S3

4

S3 — 12 mm 1/2 in 1/2 po — x2
S1 — 5.8 mm 15/64 in 15/64 po — x2
x4
x2
x2

S1 S3 — 1:1

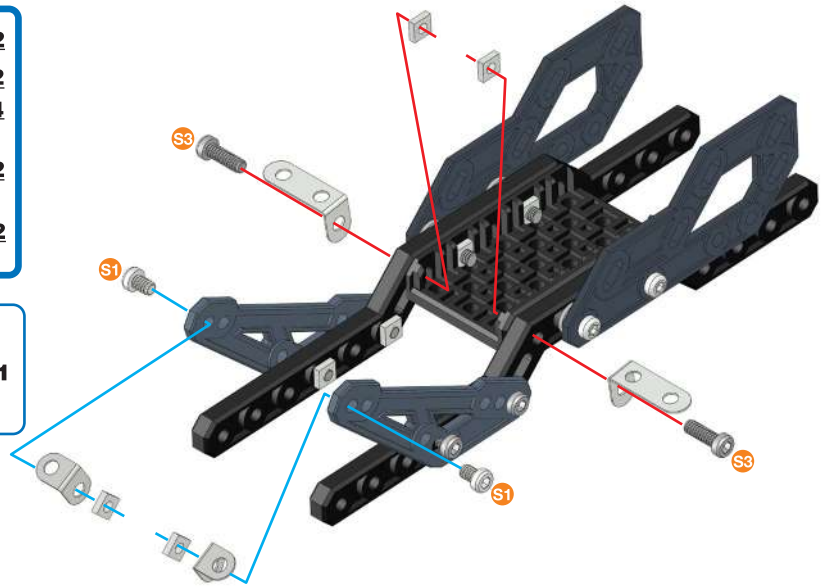

5

S2 — 9.5 mm 3/8 in 3/8 po — x4
x4
x1
x1
x1

S2 — 1:1

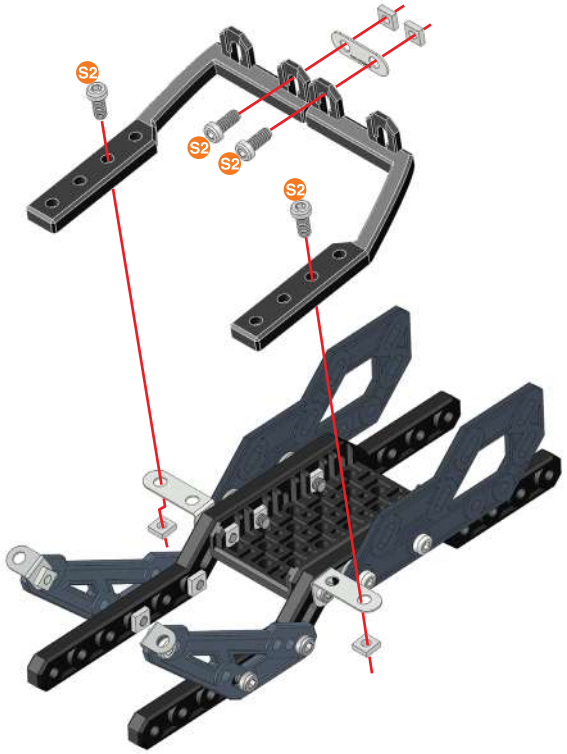

6

S2 — 9.5 mm 3/8 in 3/8 po — x4
B2 — 19 mm 3/4 in 3/4 po — x1
S4 — 19 mm 3/4 in 3/4 po — x1
x6
x4
x2
x1
x1

A338 — 1:1
S2
B2
S4

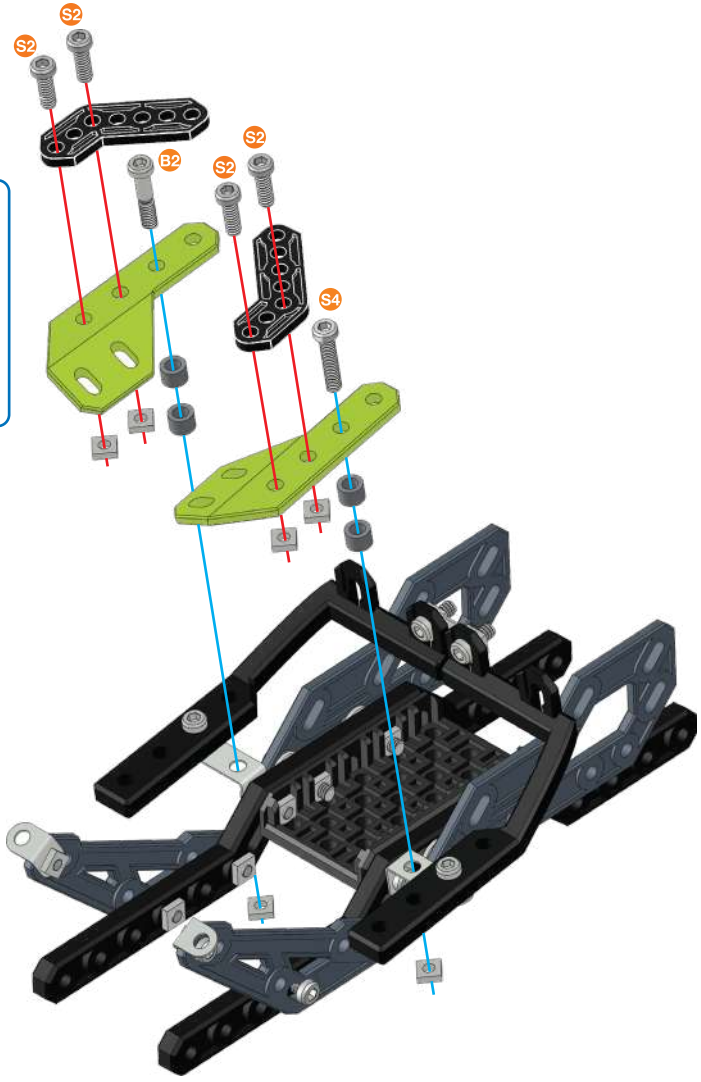

7

S3 12 mm 1/2 in 1/2 po x2
S2 9.5 mm 3/8 in 3/8 po x2
x2
x4
x1

S2
S3
1:1

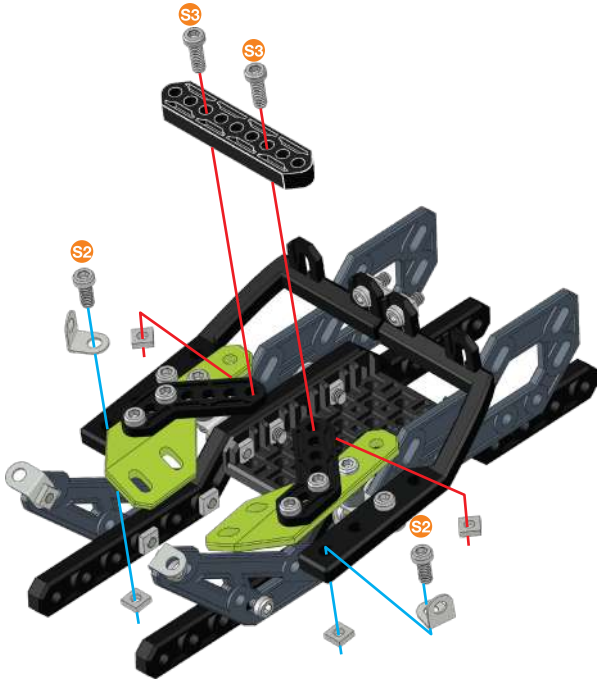

8

S1 5.8 mm 15/64 in 15/64 po x2
x2
x2

S1
1:1

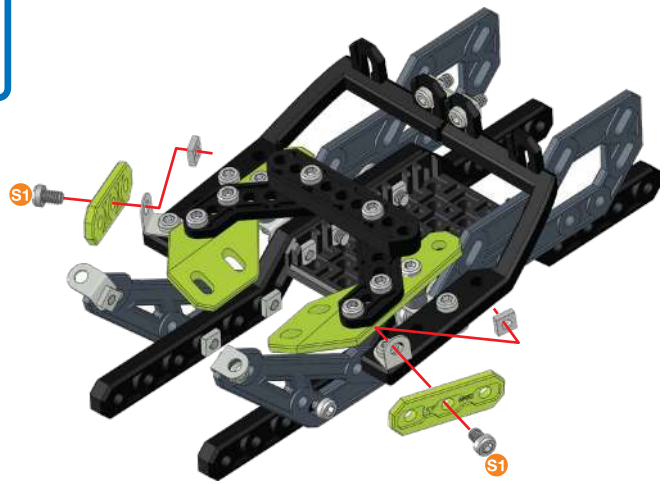

9

S1 5.8 mm 15/64 in 15/64 po x2
x2
x1
x1

S1
1:1

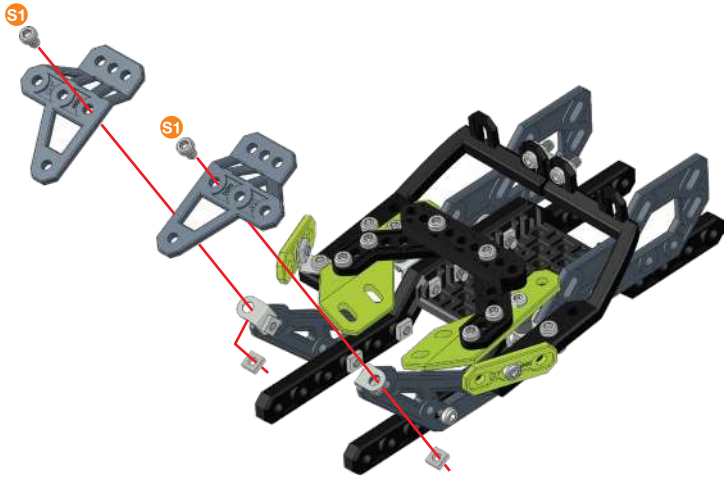

10

S1 5.8 mm 15/64 in 15/64 po x2
S2 9.5 mm 3/8 in 3/8 po x2
x4
x1
x2

S1
S2
1:1

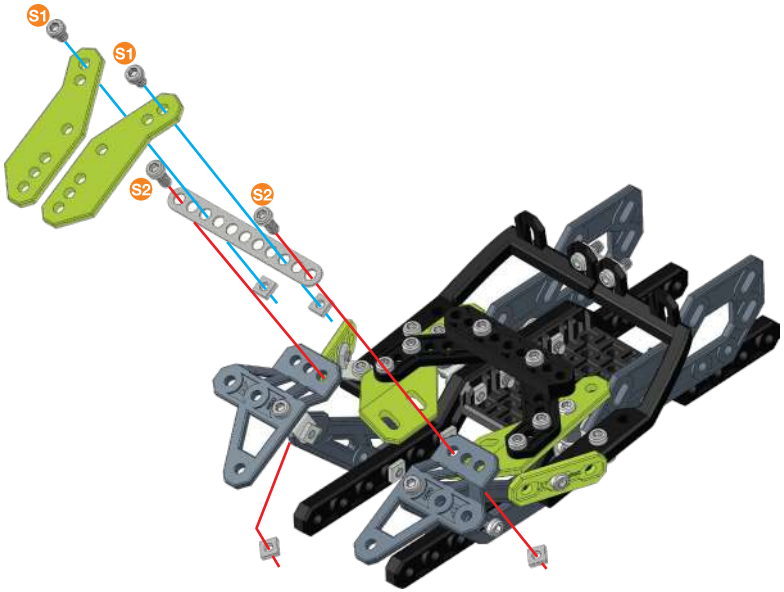

11

S2 | 9.5 mm 3/8in 3/8po | x4
x4
x2
x2

S2 | 1:1

12

S1 | 5.8 mm 15/64 in 15/64 po | x4
x4
x4

S1 | 1:1

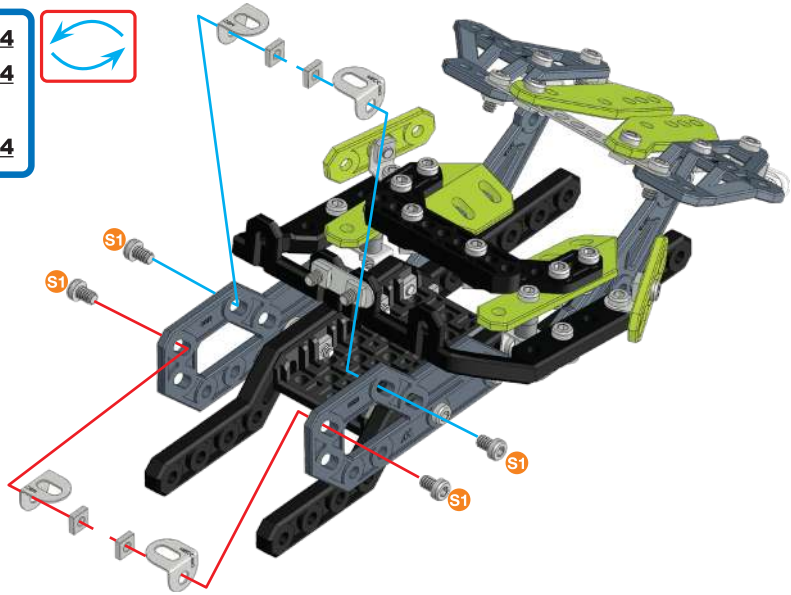

13

S1 | 5.8 mm 15/64 in 15/64 po | x2
S2 | 9.5 mm 3/8in 3/8po | x2
x4
x1
x2
x2

S1
S2 | 1:1

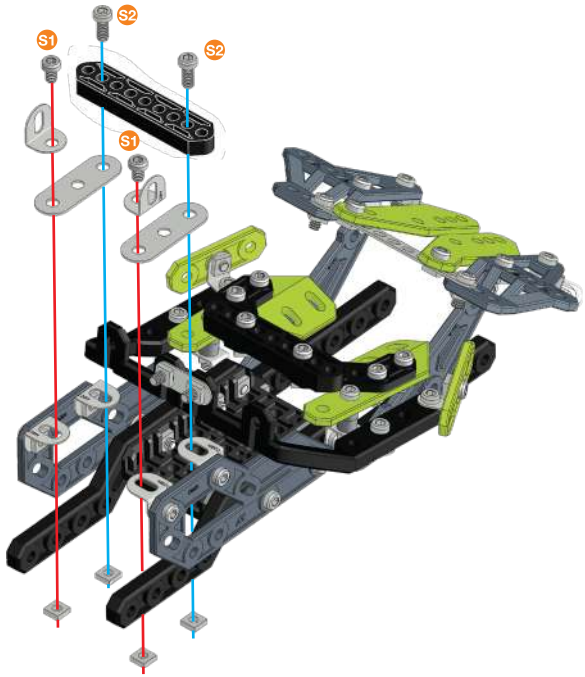

14

S2 | 9.5 mm 3/8in 3/8po | x2
x2
x2

S2 | 1:1

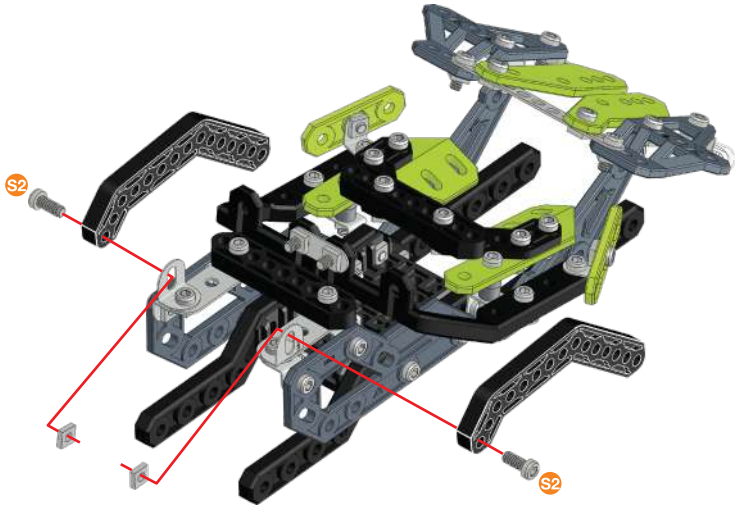

15

x3

x3

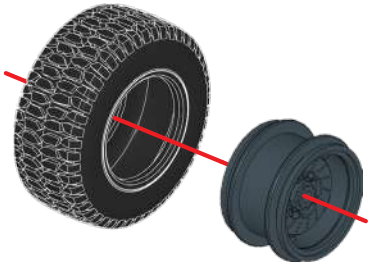

x3

16 ⑭+⑮+

75 mm
2 15/16in
2 15/16po
x1

x2

x2

x4

x2

A238 1:1

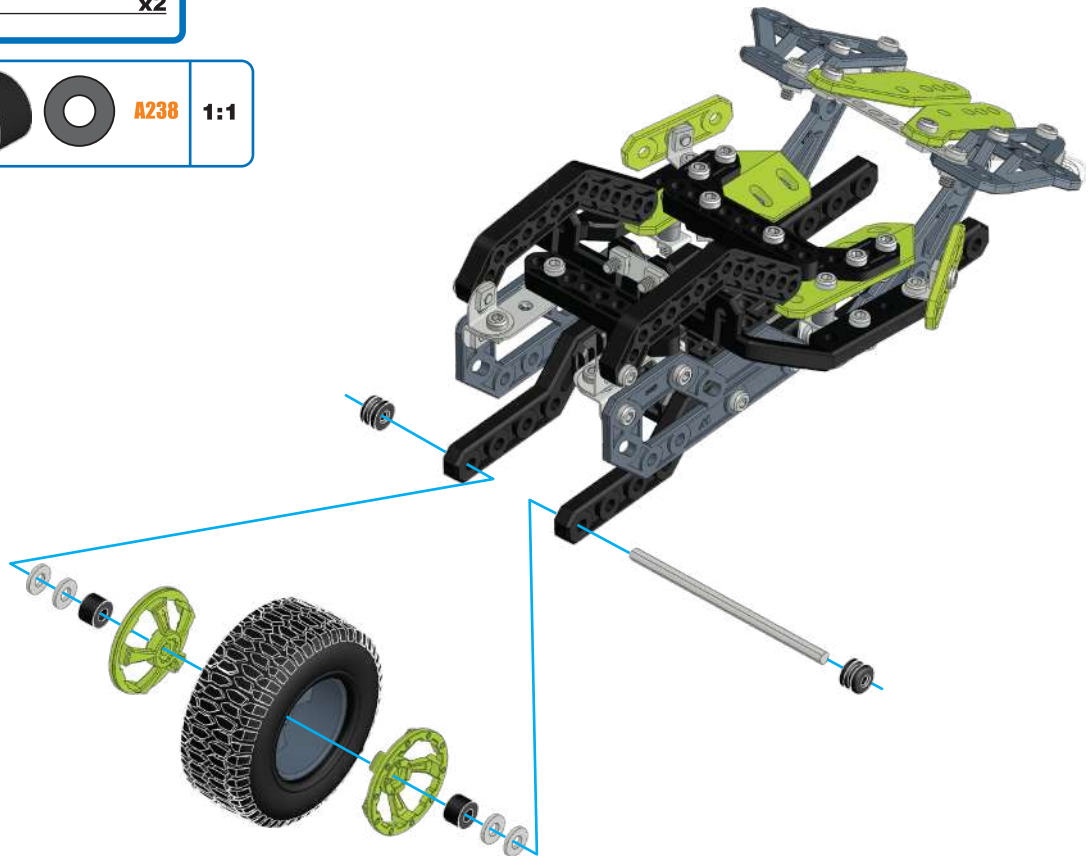

1:1

17 ⑮+⑯+

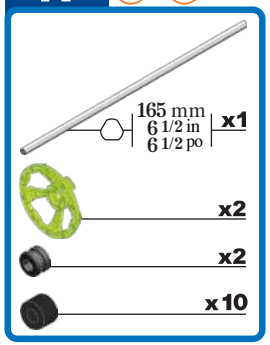

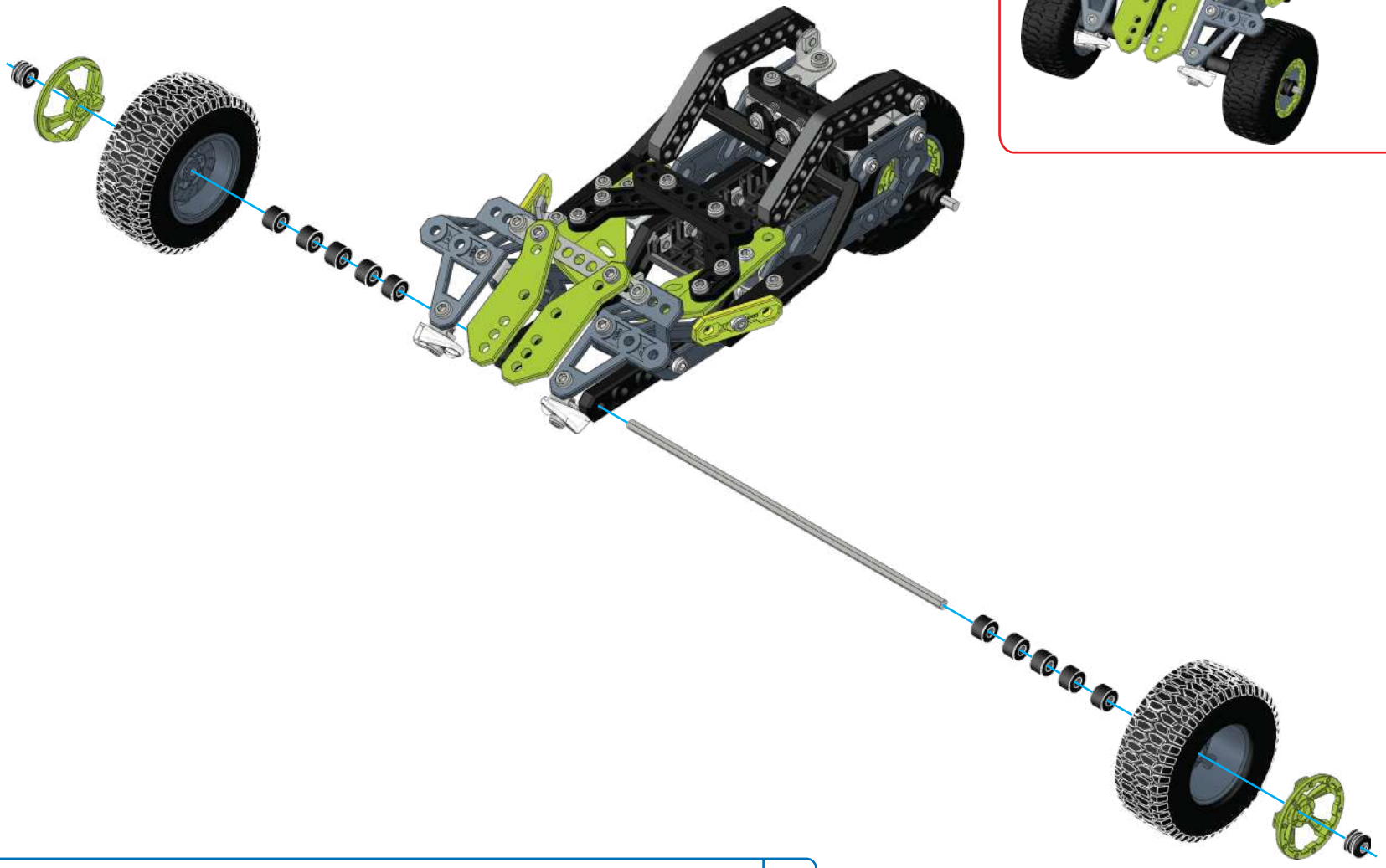

1

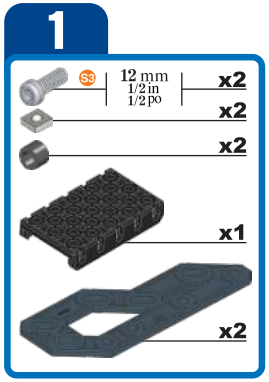
S3
12 mm
1/2 in
1/2 po
x2
x2
x2
x1
x2

A338
S3
1:1

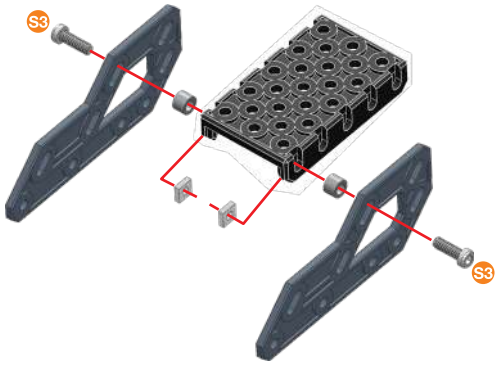
S3
S3

2

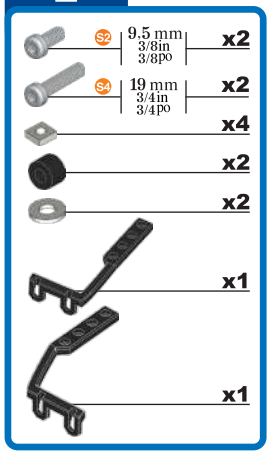
S2
9.5 mm
3/8 in
3/8 po
x2
S4
19 mm
3/4 in
3/4 po
x2
x4
x2
x2
x1
x1

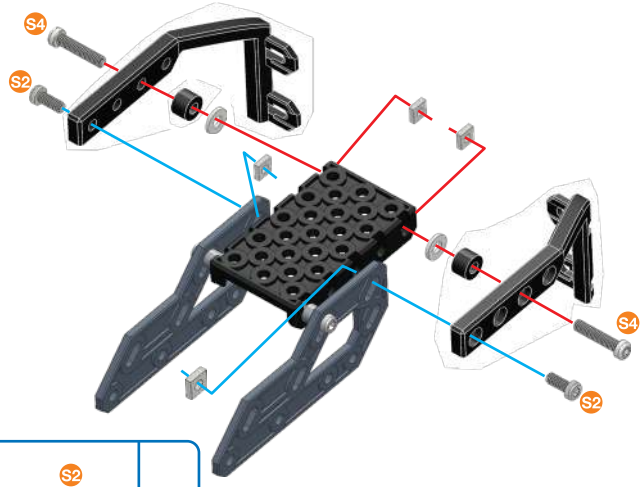
S4
S2
S4
S2

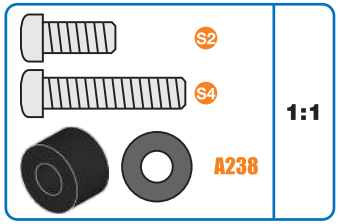
S2
S4
A238
1:1

3

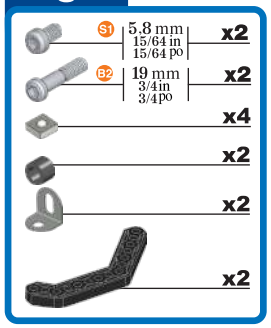
S1
5.8 mm
15/64 in
15/64 po
x2
B2
19 mm
3/4 in
3/4 po
x2
x4
x2
x2
x2

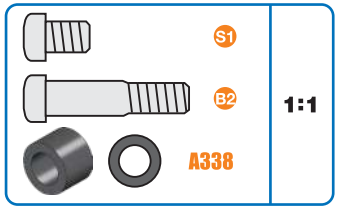
S1
B2
A338
1:1

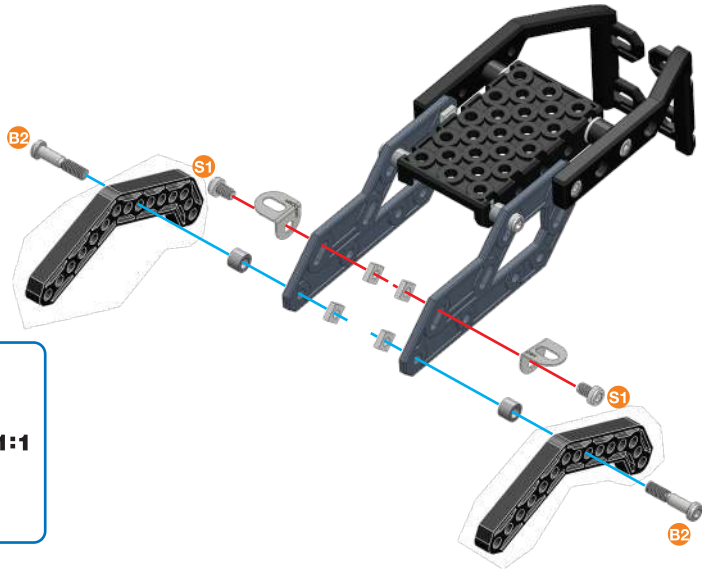
B2
S1
S1
B2

4

S1 5.8 mm 15/64 in 15/64 po — x2
x2
x2
x1

S1 — 1:1

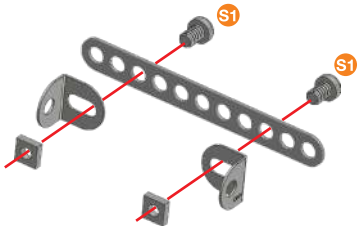

5 ③+④+

S2 9.5 mm 3/8 in 3/8 po — x2
S3 12 mm 1/2 in 1/2 po — x2
x4
x4
x2

S2
S3 — 1:1

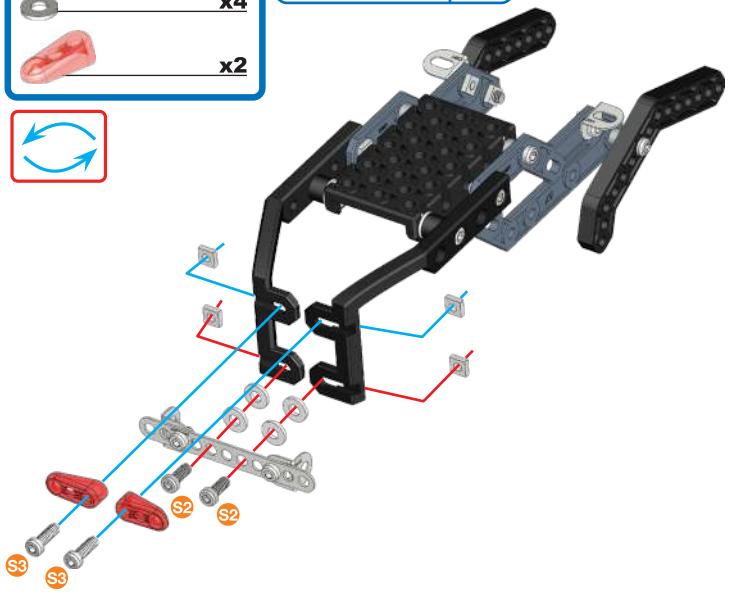

6

S2 9.5 mm 3/8 in 3/8 po — x2
B1 14.7 mm 37/64 in 37/64 po — x2
x4
x2

S2
B1 — 1:1

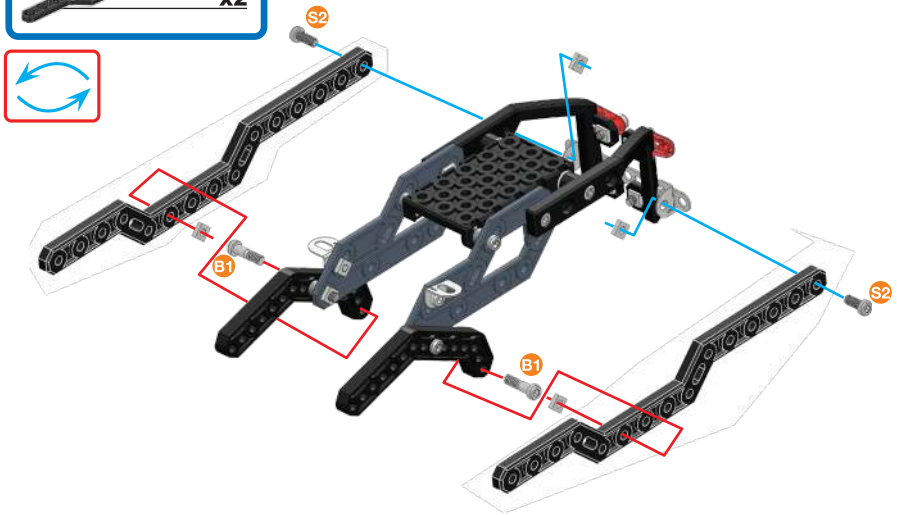

7

S2 9.5 mm 3/8 in 3/8 po — x4
x4
x2
x2

S2 — 1:1

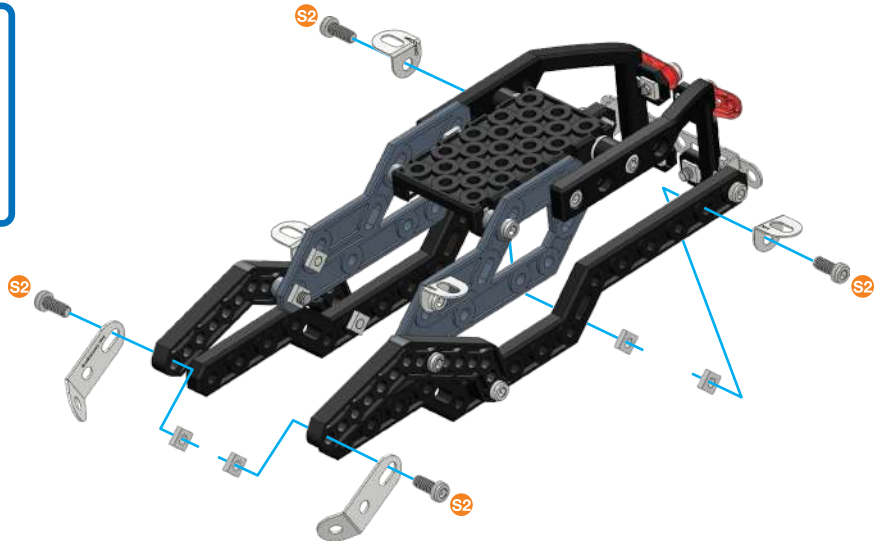

8

x2
x2
x2

x2

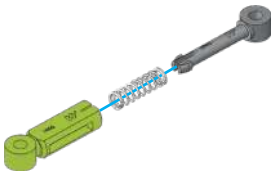

9 ⑦+⑧+

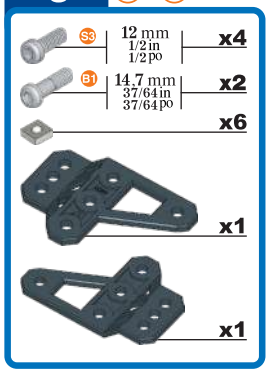
S3
12 mm
1/2 in
1/2 po
x4
B1
14.7 mm
37/64 in
37/64 po
x2
x6
x1
x1

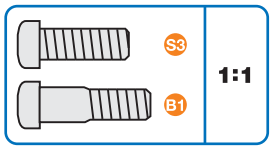
S3
B1
1:1

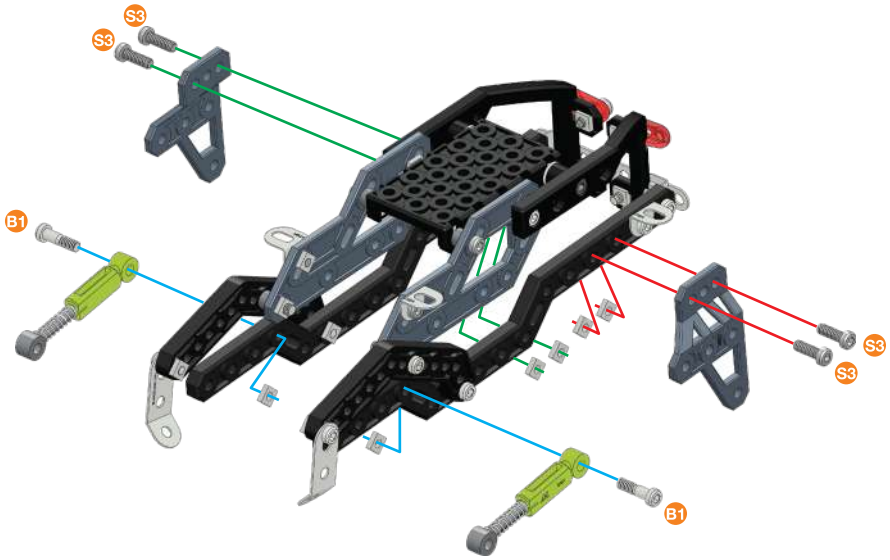
S3
S3
B1
S3
S3
B1

10

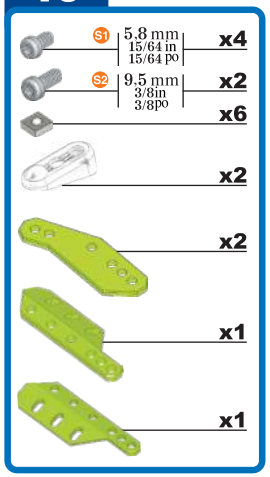
S1
5.8 mm
15/64 in
15/64 po
x4
S2
9.5 mm
3/8 in
3/8 po
x2
x6
x2
x2
x1
x1

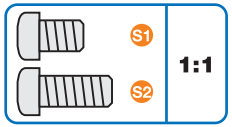
S1
S2
1:1

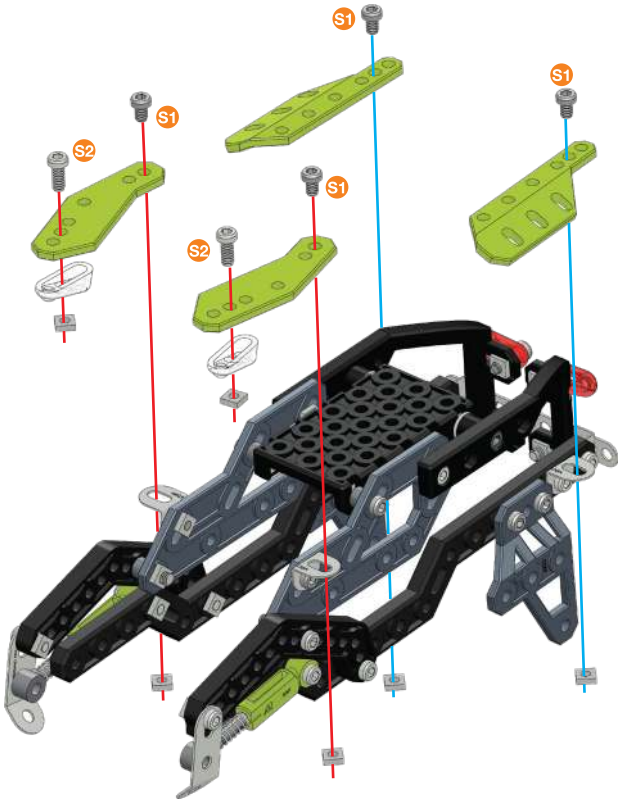
S1
S1
S2
S1
S1
S2

11

x4
x4

x4

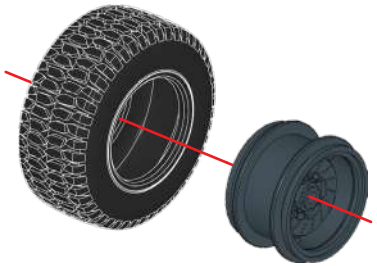

12 ⑩+⑪+

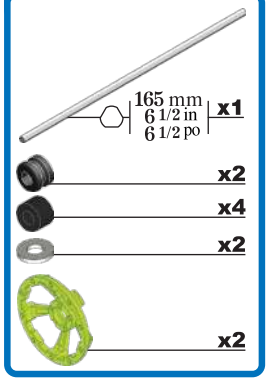
165 mm
6 1/2 in
6 1/2 po
x1
x2
x4
x2
x2

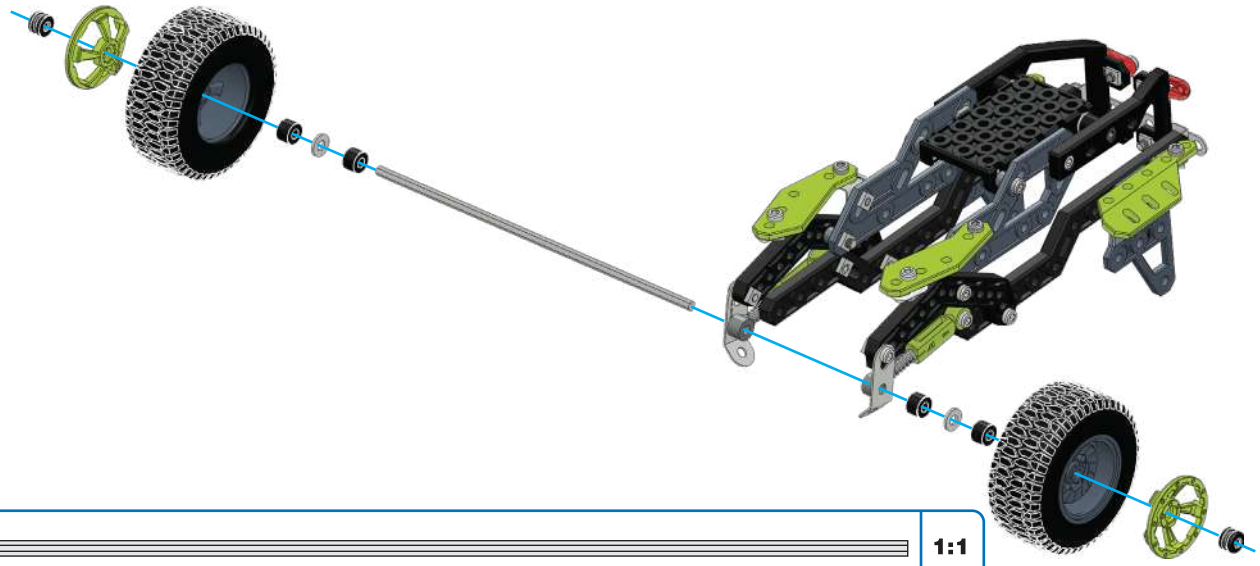

A238
1:1

1:1

13 ⑪+⑫+

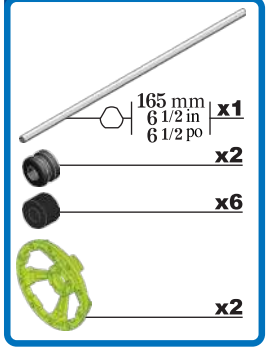
165 mm
6 1/2 in
6 1/2 po
x1
x2
x6
x2

A238
1:1

1:1

1

S2
9.5 mm
3/8in
3/8po
x4
x4
x1
x2
x2

S2
1:1

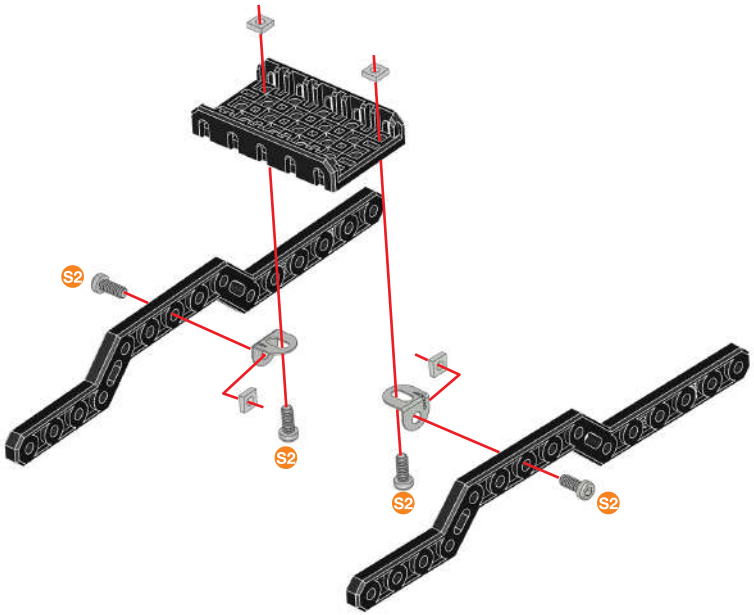
S2
S2
S2
S2

2

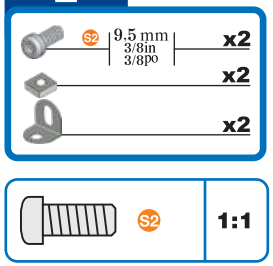
S2
9.5 mm
3/8in
3/8po
x2
x2
x2

S2
1:1

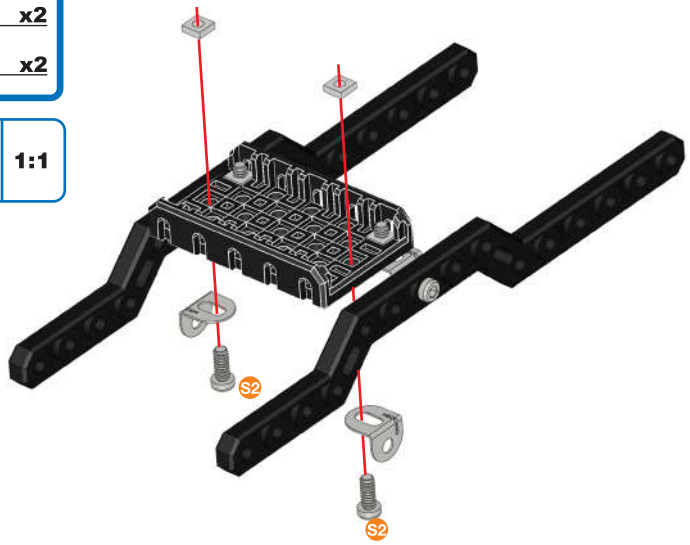
S2
S2

3

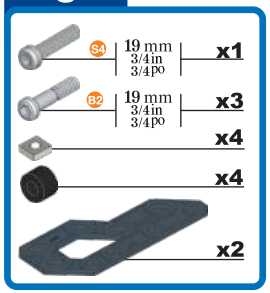
S4
19 mm
3/4in
3/4po
x1
B2
19 mm
3/4in
3/4po
x3
x4
x4
x2

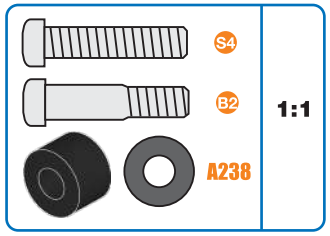
S4
B2
1:1
A238

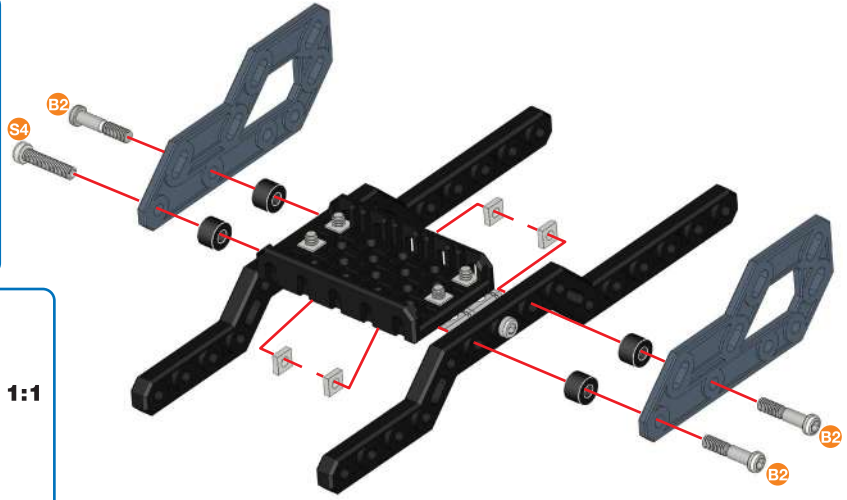
B2
S4
B2
B2

4

S3 | 12 mm / 1/2 in / 1/2 po | x2

x2

x1

x1

S3 | 1:1

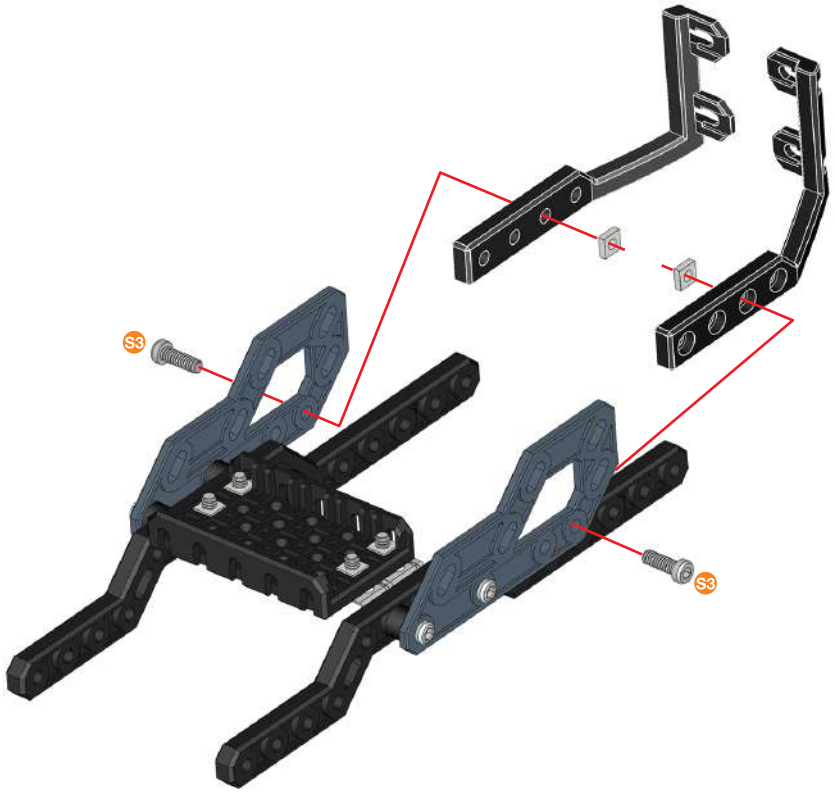

5

B1 | 14.7 mm / 37/64 in / 37/64 po | x2

x2

x2

B1 | 1:1

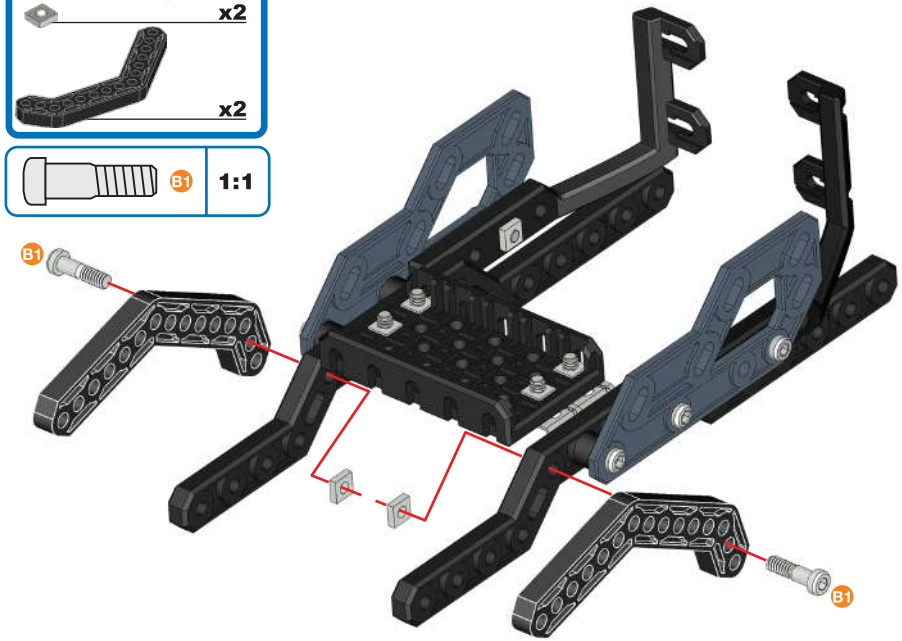

6

S1 | 5.8 mm / 15/64 in / 15/64 po | x4

x4

x2

x1

x1

x1

S1 | 1:1

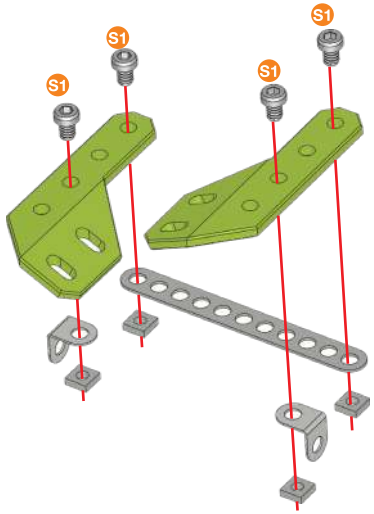

7

S1 | 5.8 mm / 15/64 in / 15/64 po | x2

x2

x2

x1

S1 | 1:1

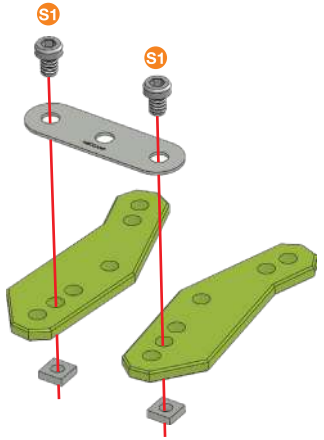

8 ⑥+⑦+

B1 14.7 mm 37/64 in 37/64 po x2
x2
x2

B1 A238 1:1

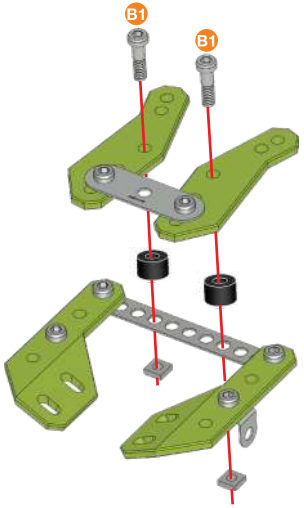

9 ⑤+⑧+

S3 12 mm 1/2 in 1/2 po x2
x2

S3 1:1

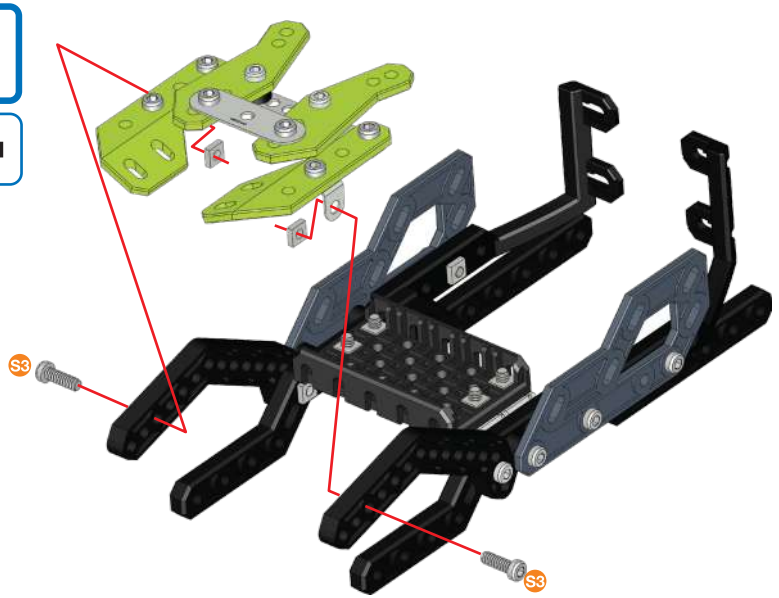

10

S5 25.4 mm 1 in 1 po x2
x2
x2
x2
x1
x1

A238
A338
S5 1:1

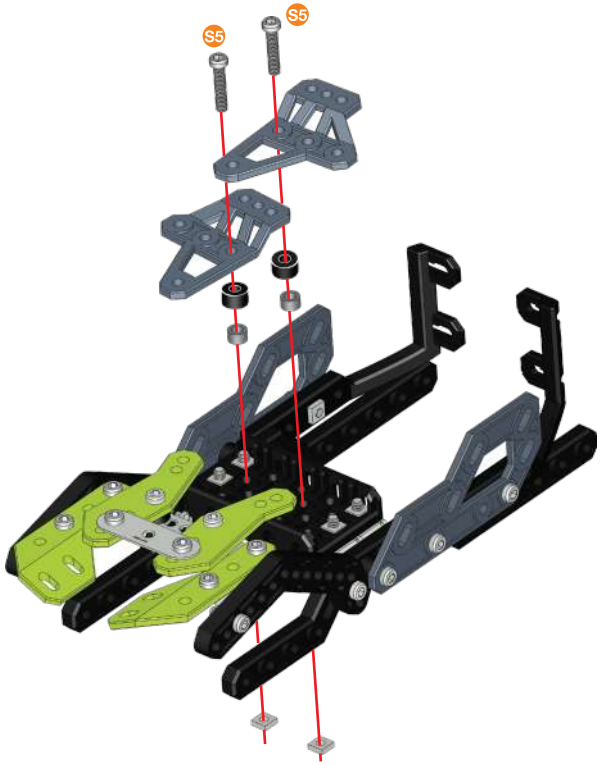

11

B1 14.7 mm 37/64 in 37/64 po x2
x2
x2

B1 1:1

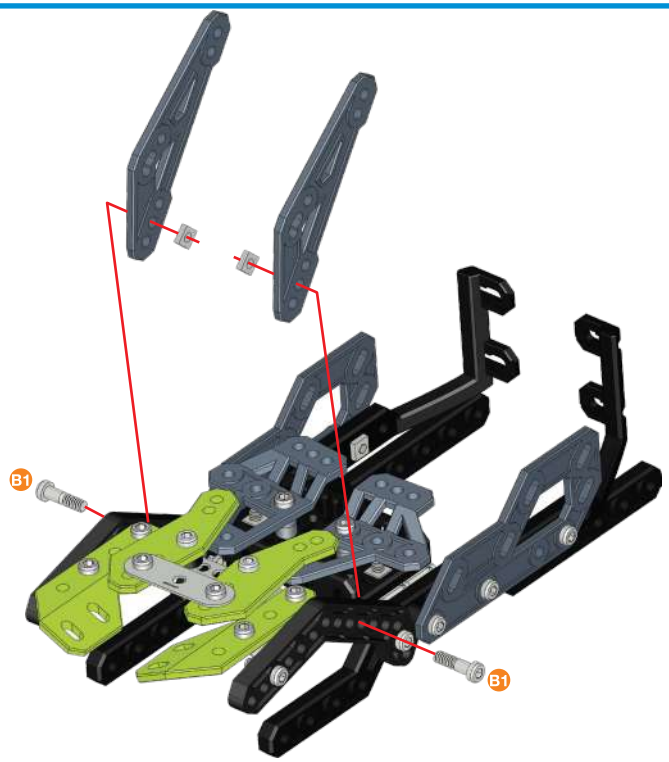

12

S3 | 12 mm 1/2 in 1/2 po | x2
x2
x2
x2

S3 | 1:1

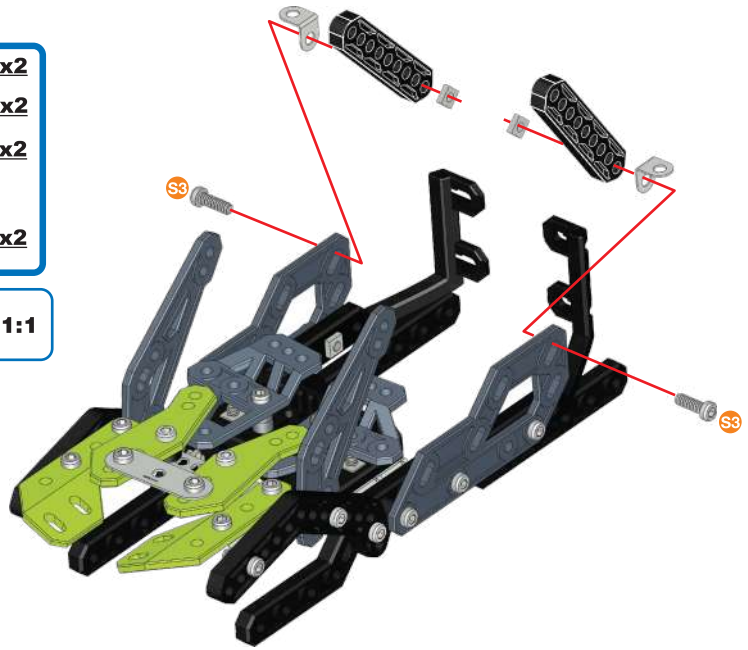

13

S4 | 19 mm 3/4 in 3/4 po | x2
S2 | 9.5 mm 3/8 in 3/8 po | x2
x4
x2
x2
x2

A338
S2
S4
1:1

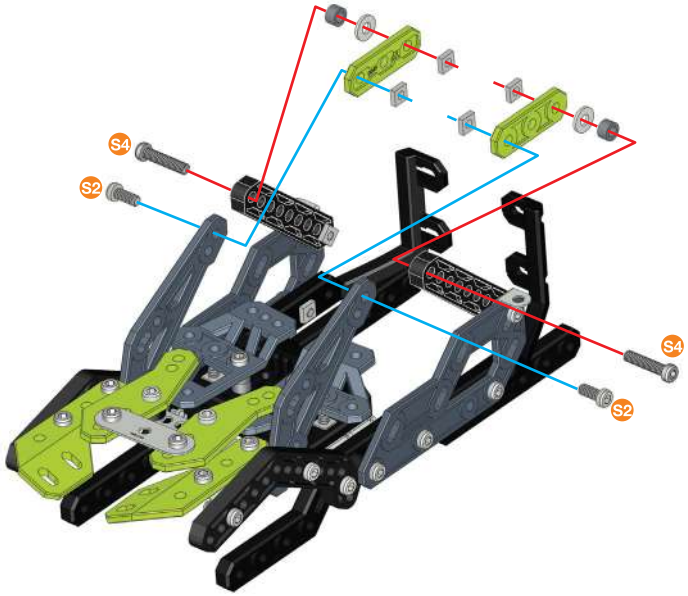

14

S1 | 5.8 mm 15/64 in 15/64 po | x2
x2
x2

S1 | 1:1

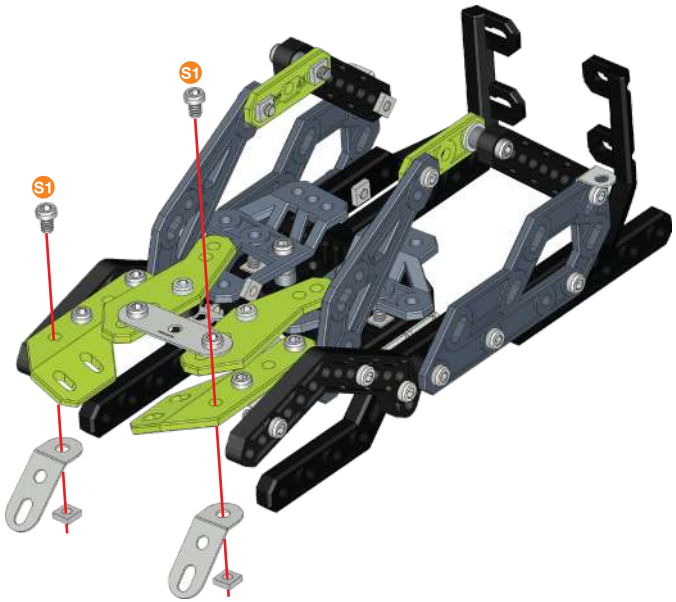

15

S2 | 9.5 mm 3/8 in 3/8 po | x2
S1 | 5.8 mm 15/64 in 15/64 po | x2
x4
x2
x2

S1
S2
1:1

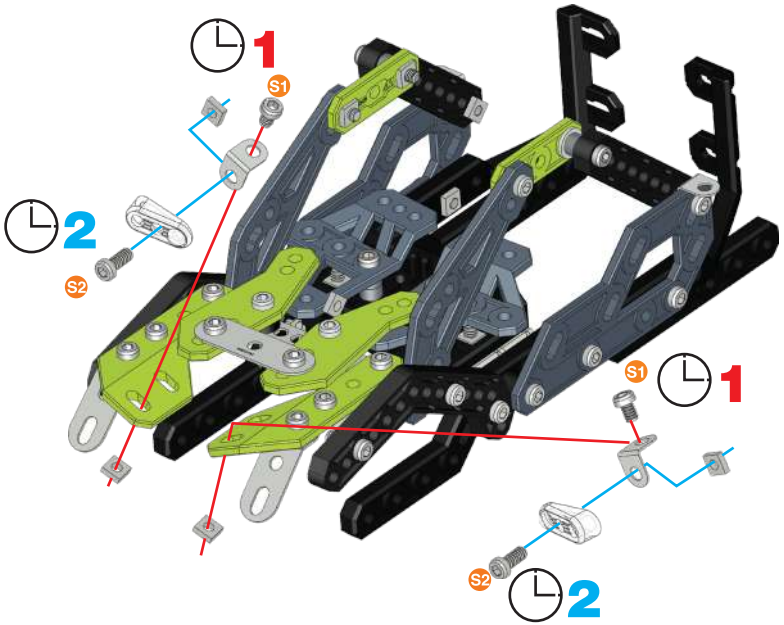

16

S3 | 12 mm / 1/2 in / 1/2 po | x2

x2

x2

S3 | 1:1

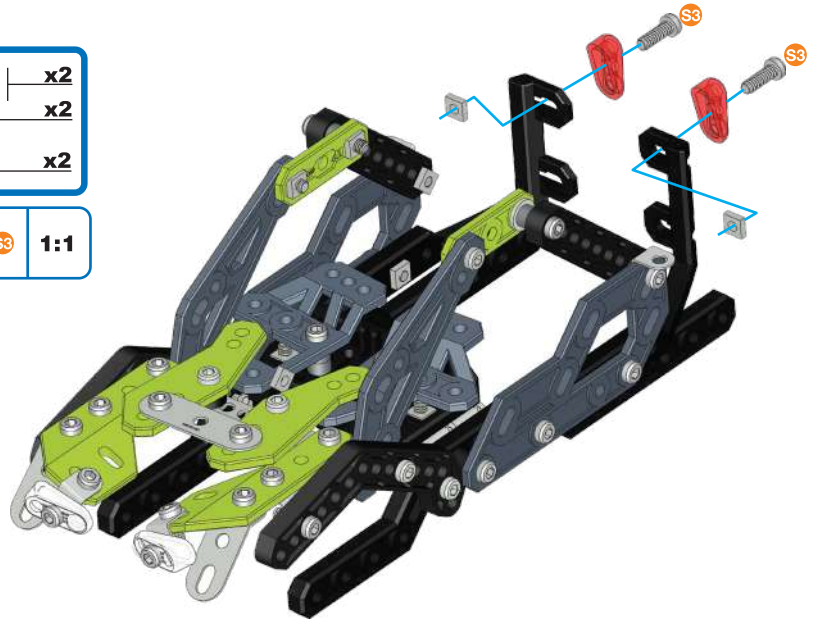

17

x4

x4

x4

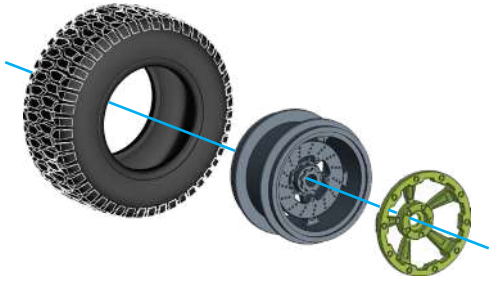

x4

18 16+17+

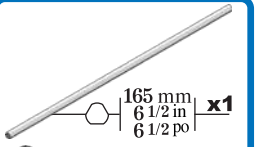

165 mm / 6 1/2 in / 6 1/2 po | x1

x6

x2

x2

A238 | 1:1

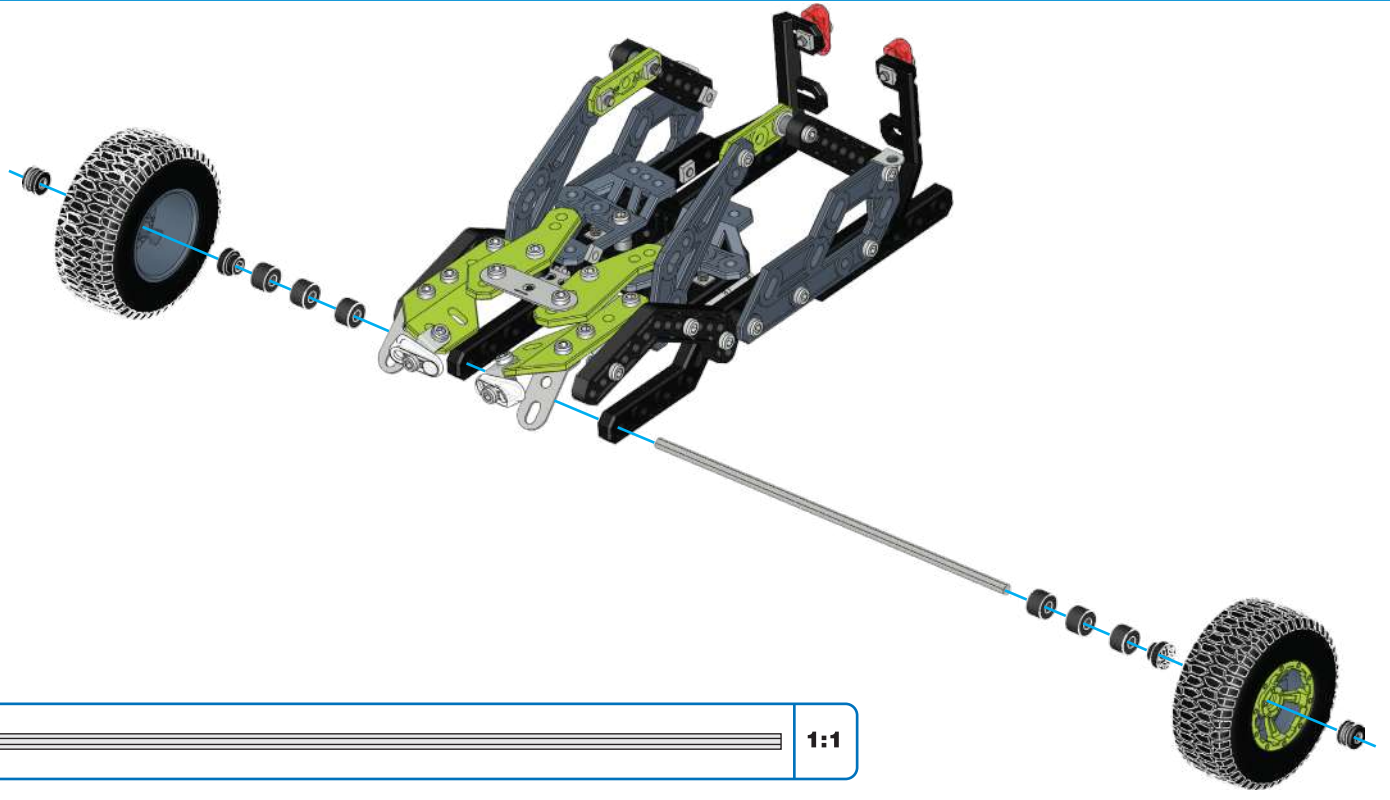

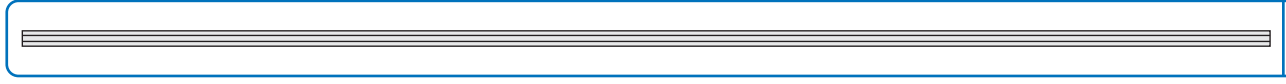

1:1

19

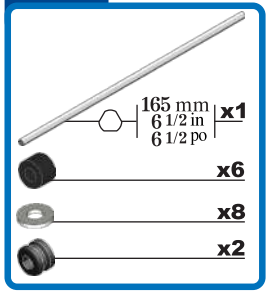
165 mm
6 1/2 in
6 1/2 po
x1
x6
x8
x2

A238
1:1

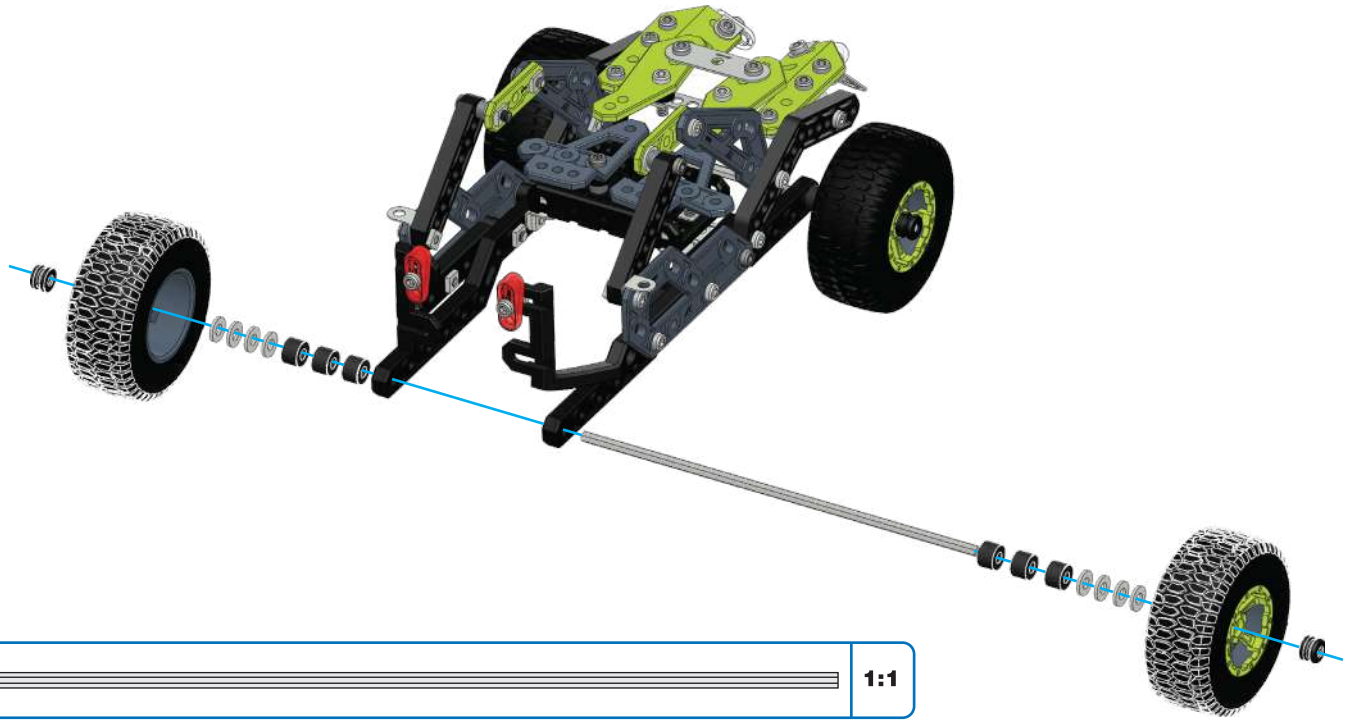

1:1

20

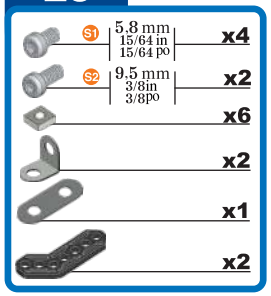
S1
5.8 mm
15/64 in
15/64 po
x4
S2
9.5 mm
3/8in
3/8po
x2
x6
x2
x1
x2

S1
S2
1:1

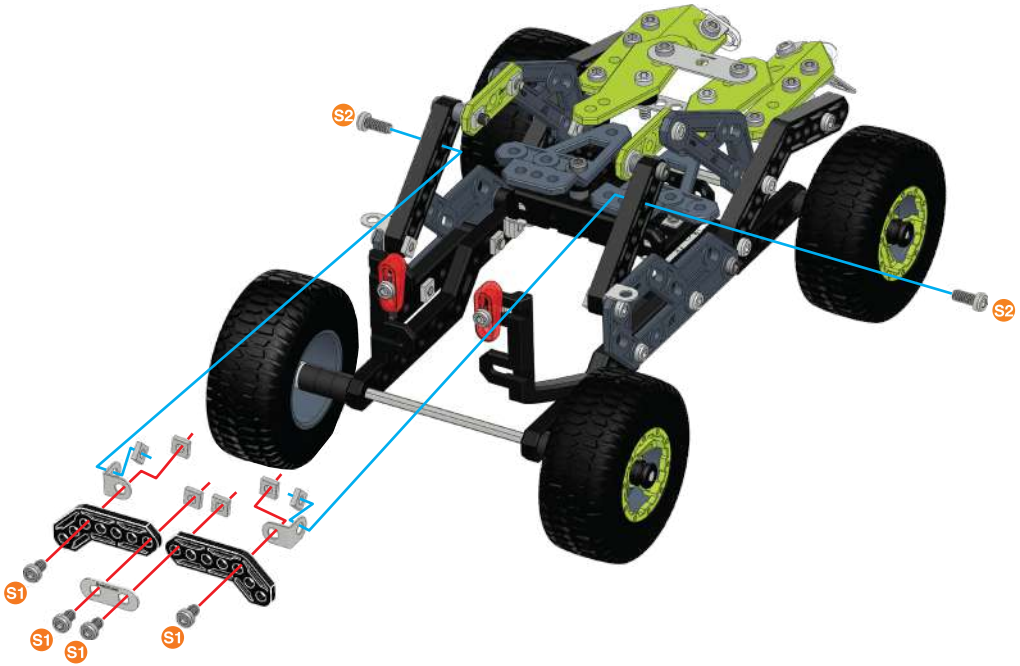
S2
S2
S1
S1
S1
S1

1

- S3 — 12 mm / 1/2 in / 1/2 po — x2
- B2 — 19 mm / 3/4 in / 3/4 po — x2
- S5 — 25.4 mm / 1 in / 1 po — x2
- x6
- x4
- x1
- x2
- x2

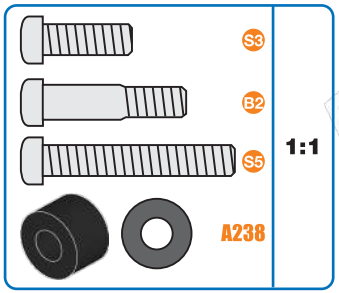

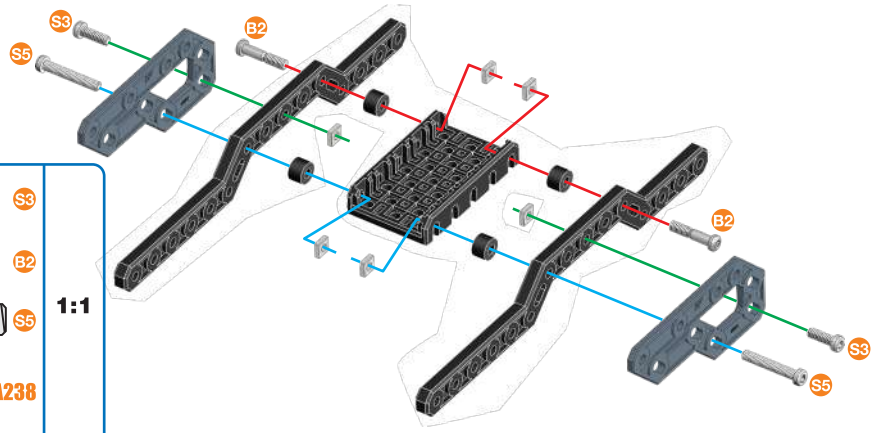

2

- S3 — 12 mm / 1/2 in / 1/2 po — x4
- x4
- x2

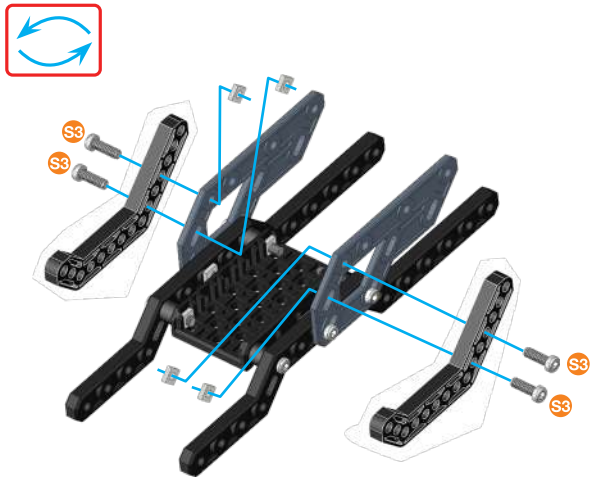

3

- B1 — 14.7 mm / 37/64 in / 37/64 po — x4
- x4
- x2
- x1
- x1
- x2

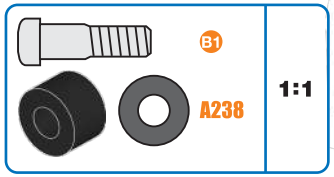

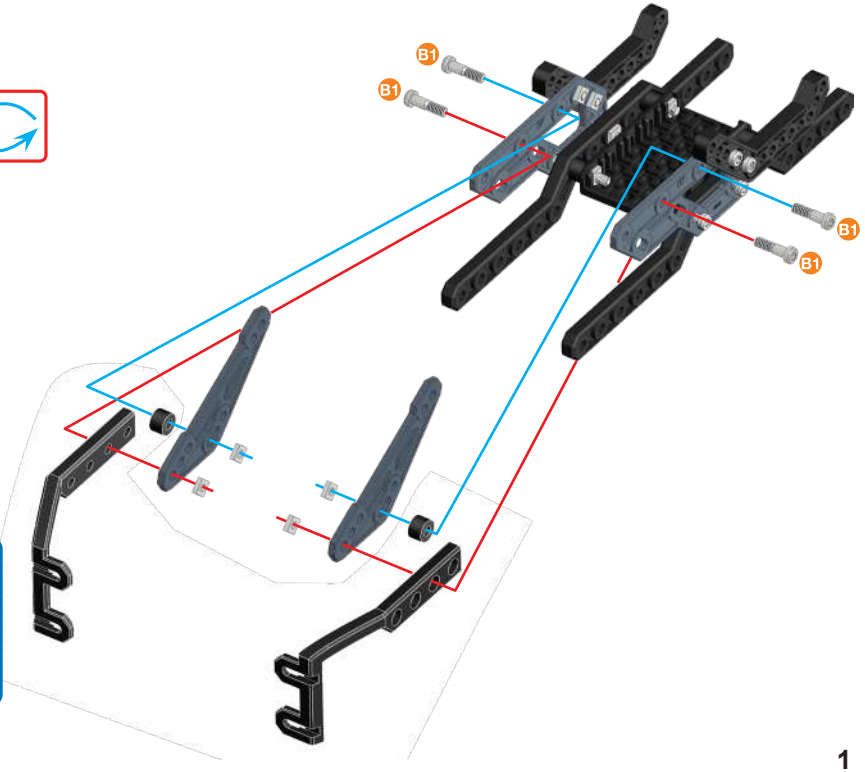

4

- S2 | 9.5 mm 3/8in 3/8po | x2
- S1 | 5.8 mm 15/64 in 15/64 po | x2
- x4
- x4
- x2
- x2
- x1
- x1
- x1
- x1

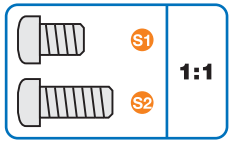

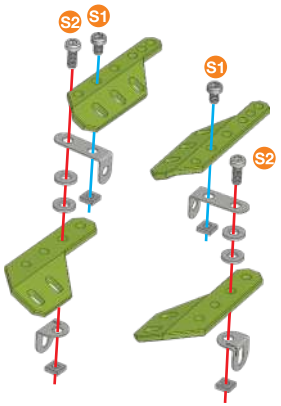

5

- S2 | 9.5 mm 3/8in 3/8po | x2
- S1 | 5.8 mm 15/64 in 15/64 po | x2
- x4
- x2
- x2

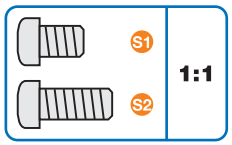

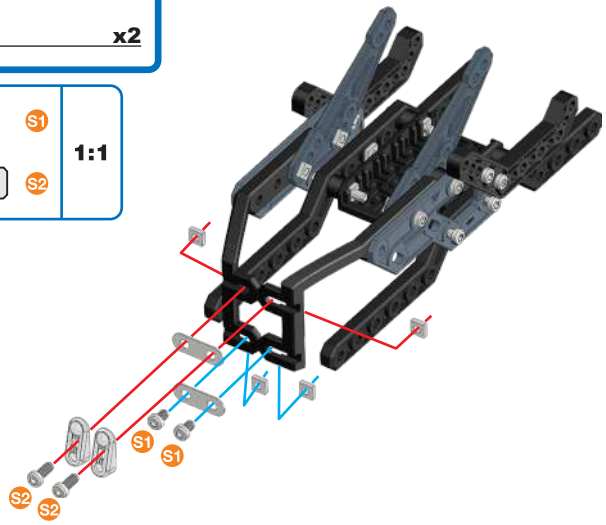

6 ④+⑤+

- B1 | 14.7 mm 37/64 in 37/64 po | x2
- x2

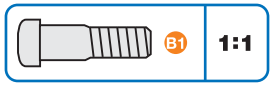

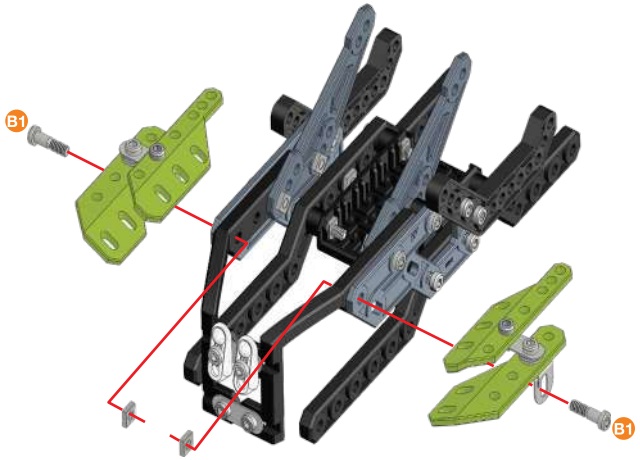

7

- B1 | 14.7 mm 37/64 in 37/64 po | x2
- x2
- x2
- x2

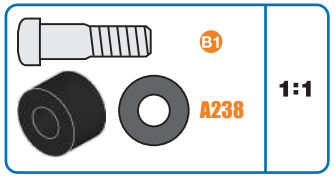

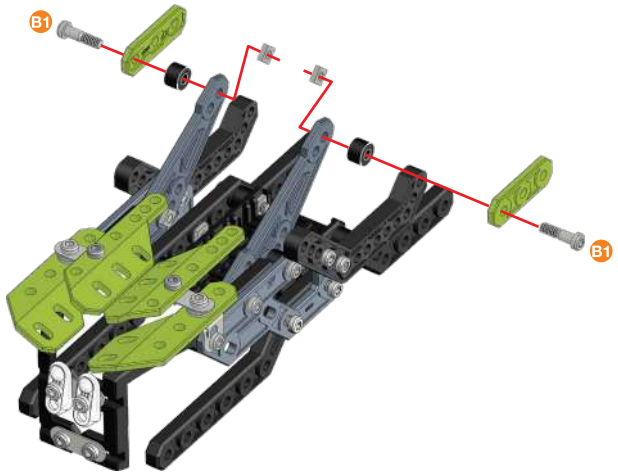

8

- S1 | 5.8 mm 15/64 in 15/64 po | x2
- B1 | 14.7 mm 37/64 in 37/64 po | x4
- x6
- x2
- x1
- x1
- x1

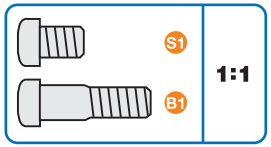

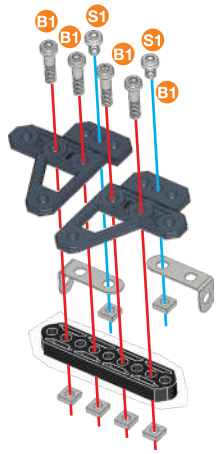

9 ⑤+⑧+

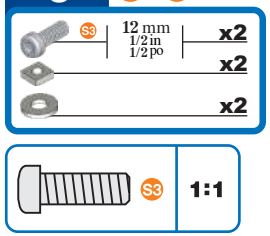
S3
12 mm
1/2 in
1/2 po
x2
x2
x2

S3
1:1

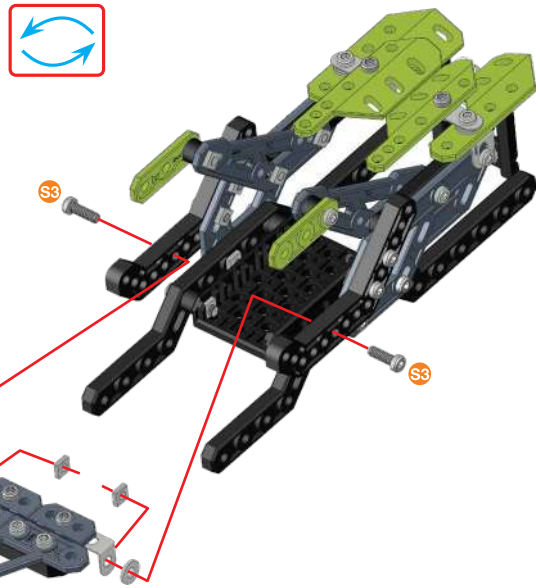
S3
S3

10

S2
9.5 mm
3/8 in
3/8 po
x2
B1
14.7 mm
37/64 in
37/64 po
x2
x4
x2
x2
x2

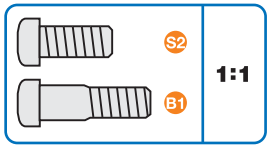
S2
B1
1:1

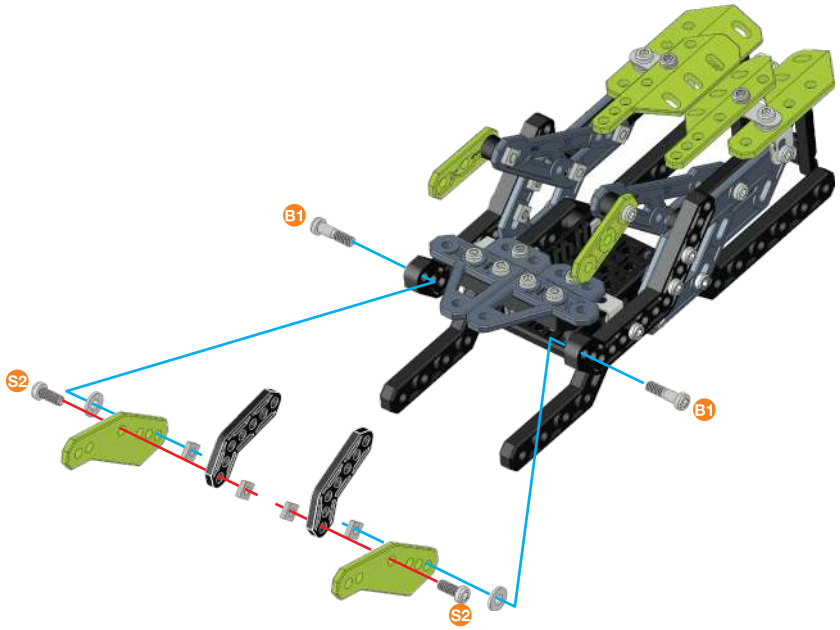
B1
B1
S2
S2

11

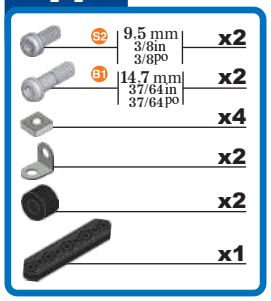
S2
9.5 mm
3/8 in
3/8 po
x2
B1
14.7 mm
37/64 in
37/64 po
x2
x4
x2
x2
x1

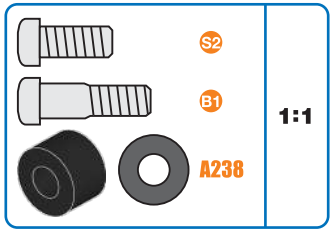
S2
B1
A238
1:1

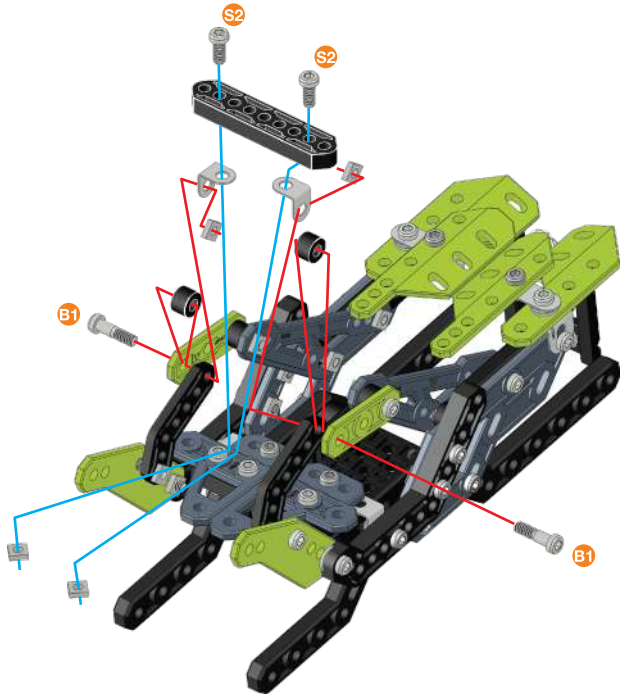
S2
S2
B1
B1

12

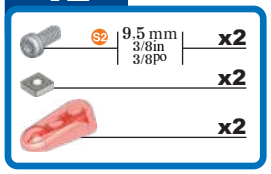
S2
9.5 mm
3/8 in
3/8 po
x2
x2
x2

S2
1:1

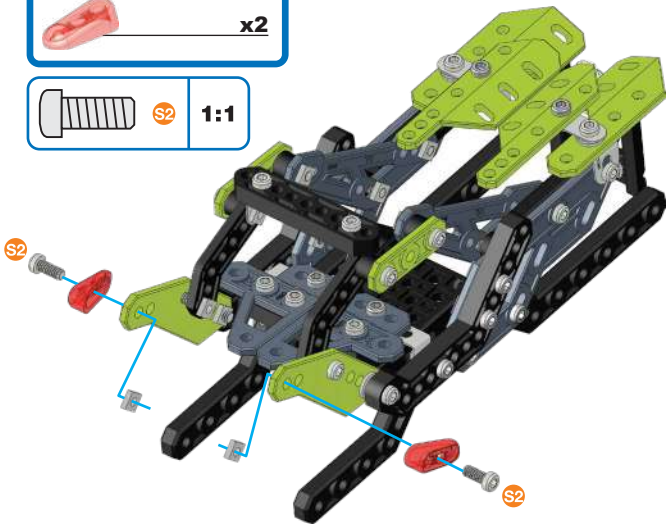
S2
S2

13

x4

x4

x4

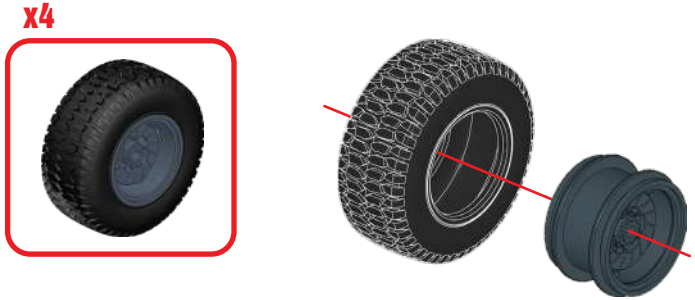

14

⑫+⑬+

165 mm
6 1/2 in
6 1/2 po
x1

x2

x6

x2

x2

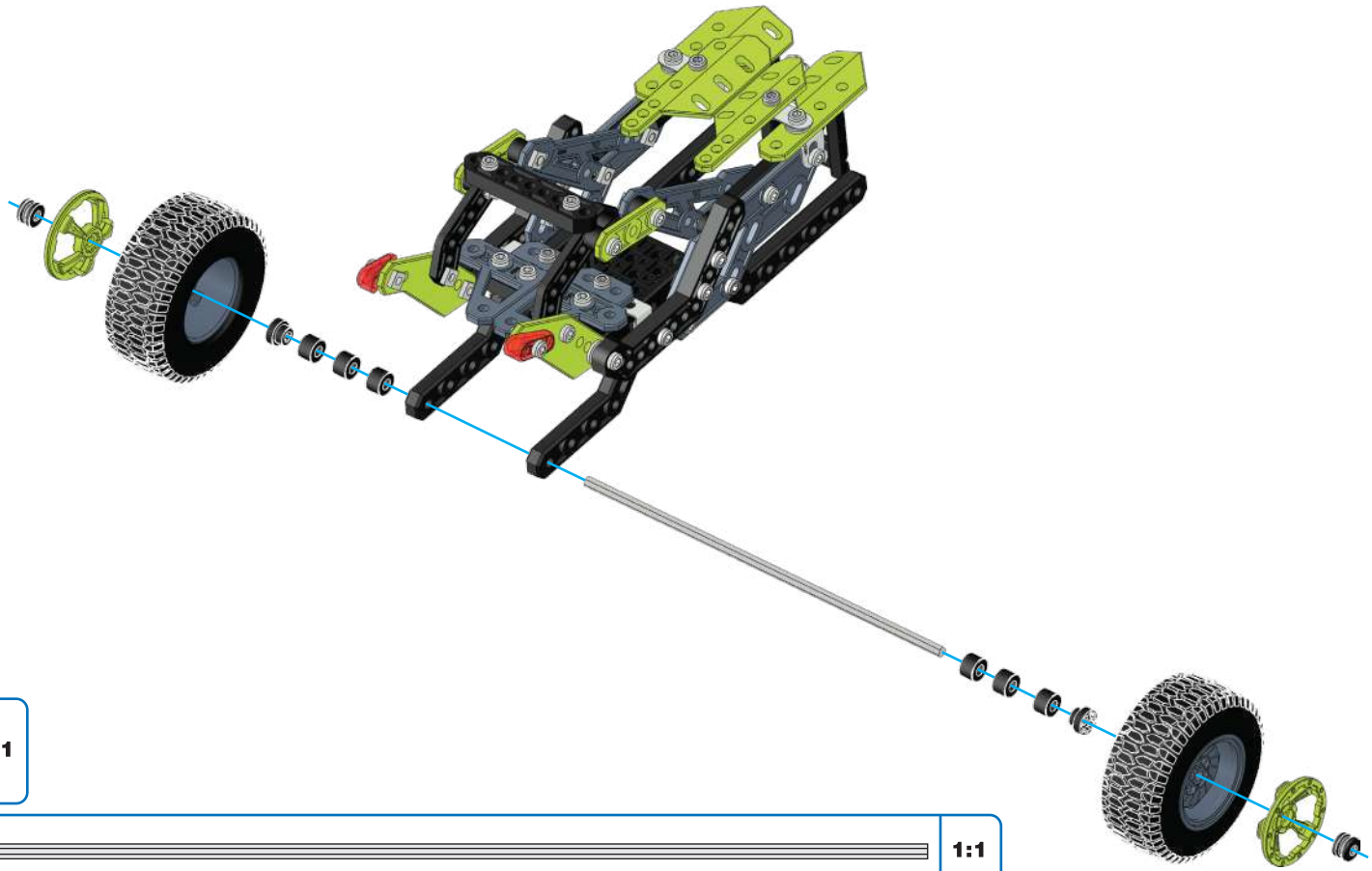

A238 1:1

1:1

15

S2 | 9.5 mm 3/8in 3/8po | x4
x4
x2
x2

S2 | 1:1

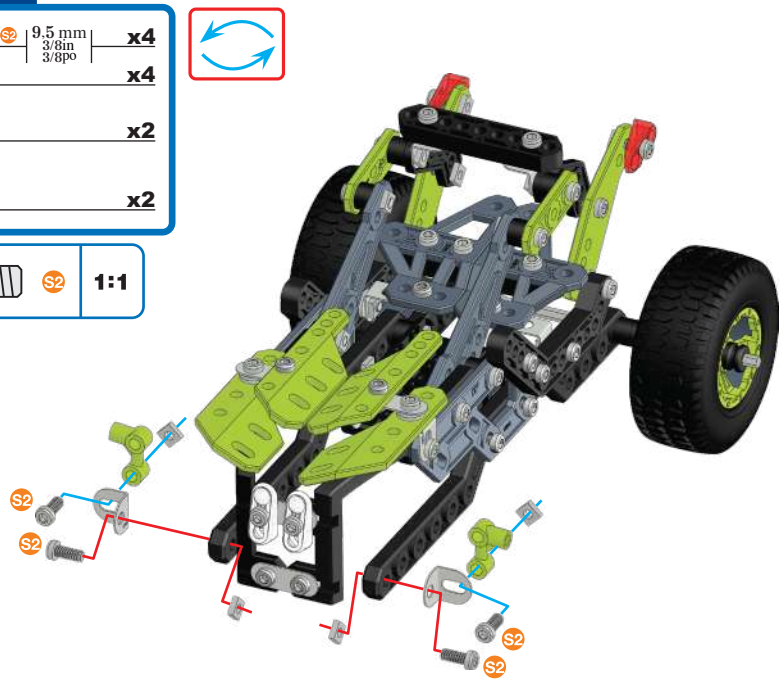

16

S1 | 5.8 mm 15/64 in 15/64 po | x2
x2
x2

S1 | 1:1

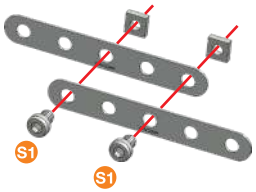

17 ⑮+⑯+

S2 | 9.5 mm 3/8in 3/8po | x2
x2

S2 | 1:1

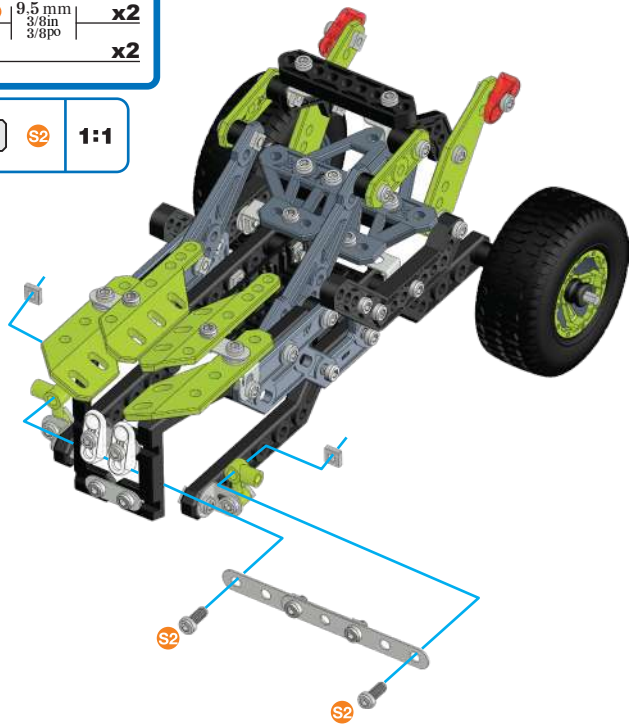

18 ⑬+⑰+

S5 | 25.4 mm 1in 1po | x2
x2
x2

S5 | A238 | 1:1

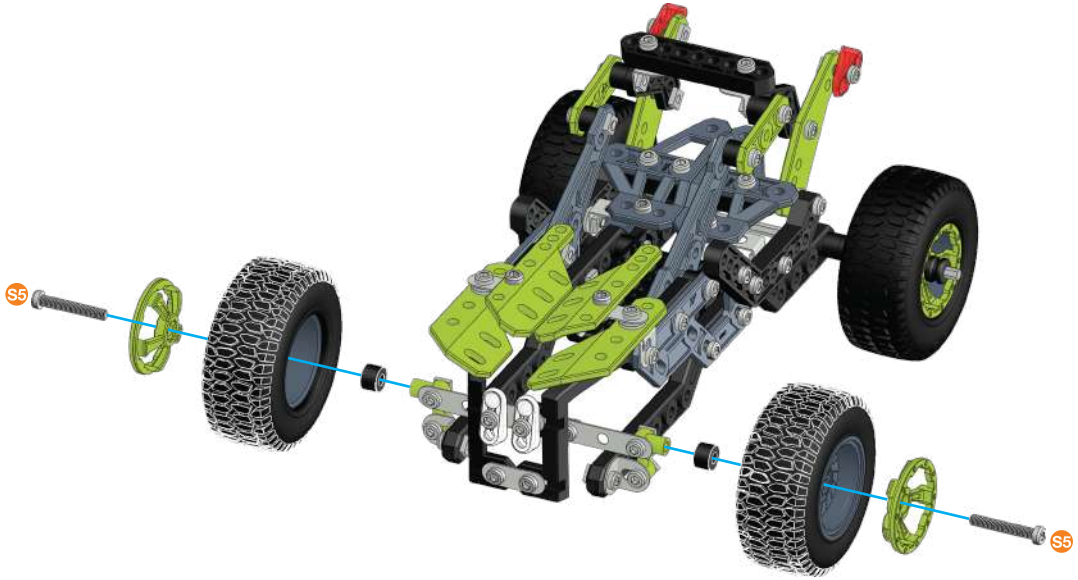

1

- S1 | 5.8 mm 15/64 in 15/64 po | x2
- x2
- x2
- x1

S1 1:1

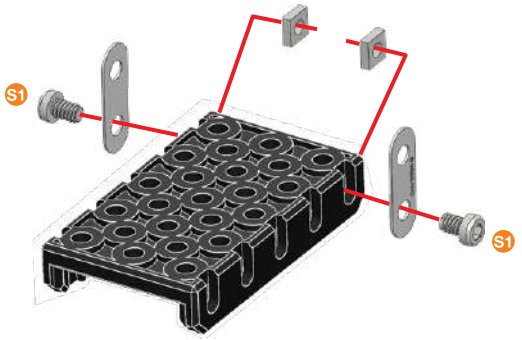

2

- B1 | 14.7 mm 37/64 in 37/64 po | x1
- S6 | 28 mm 1 1/8 in 1 1/8 po | x1
- x2
- x1
- x1
- x1

B1 S6 1:1 A238

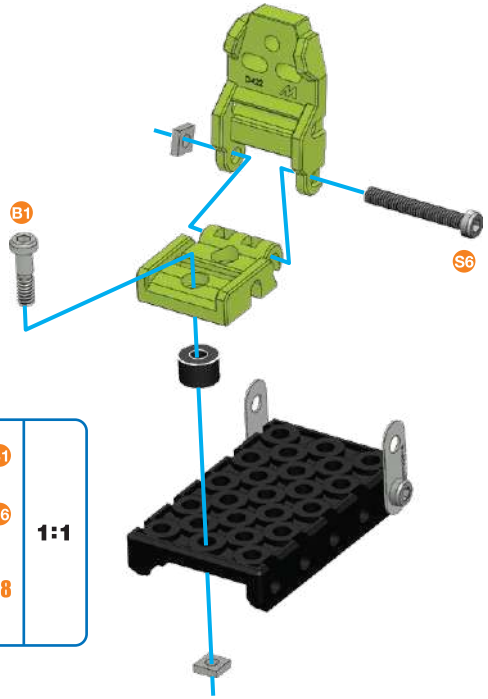

3

- S2 | 9.5 mm 3/8 in 3/8 po | x2
- x2
- x2
- x1

S2 1:1

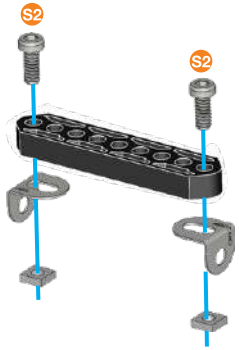

4 ③+

- S2 | 9.5 mm 3/8 in 3/8 po | x2
- x2
- x2
- x2
- x1
- x1

S2 1:1

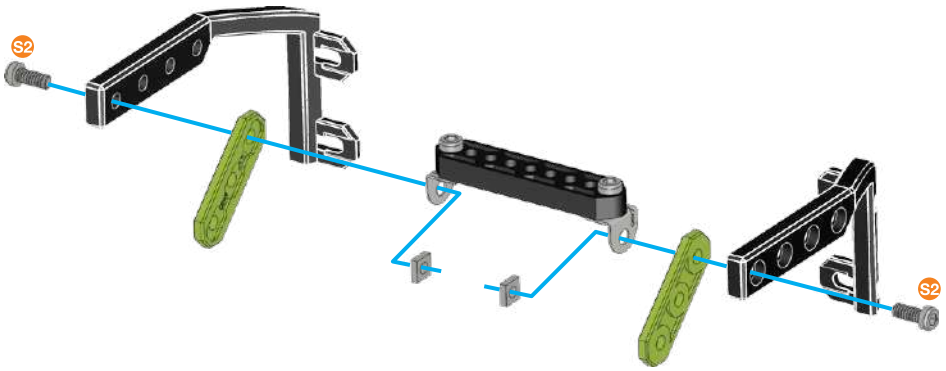

5

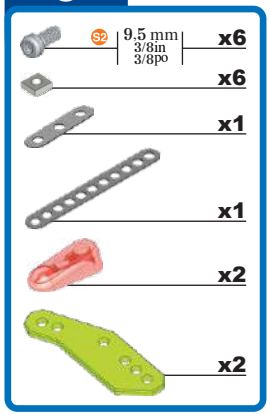
S2
9.5 mm
3/8in
3/8po
x6
x6
x1
x1
x2
x2

S2
1:1

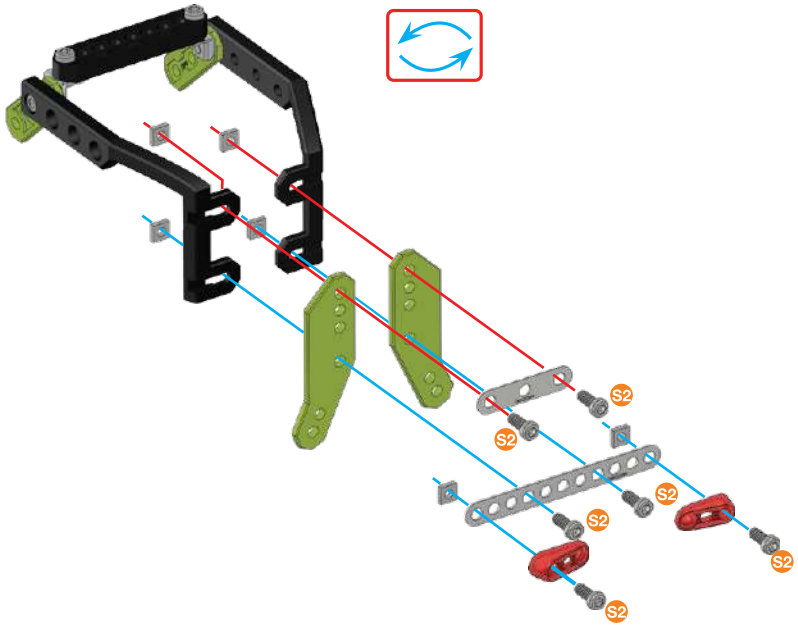
S2
S2
S2
S2
S2
S2
S2

6

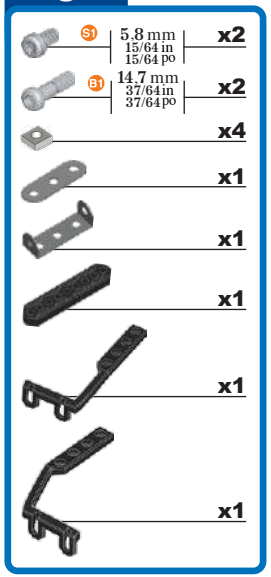
S1
5.8 mm
15/64 in
15/64 po
x2
B1
14.7 mm
37/64 in
37/64 po
x2
x4
x1
x1
x1
x1
x1

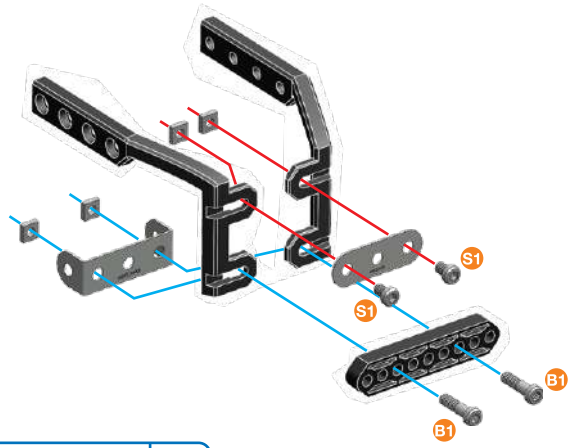
S1
S1
B1
B1

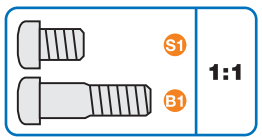
S1
B1
1:1

7

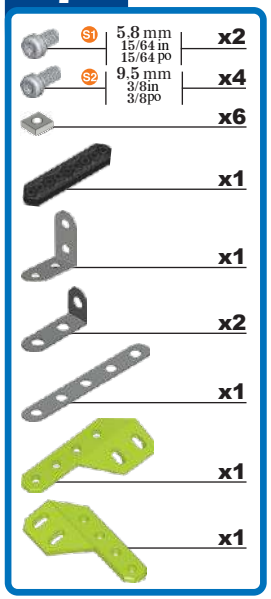
S1
5.8 mm
15/64 in
15/64 po
x2
S2
9.5 mm
3/8in
3/8po
x4
x6
x1
x1
x2
x1
x1
x1

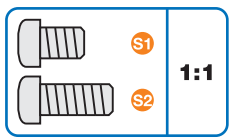
S1
S2
1:1

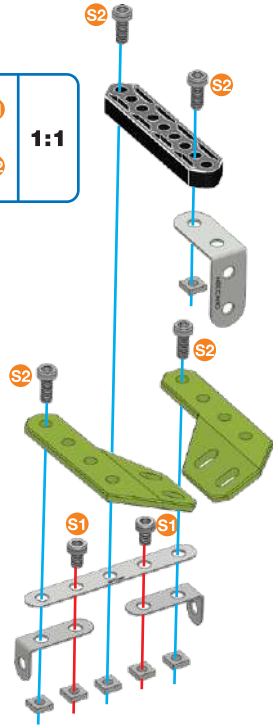
S2
S2
S2
S2
S1
S1

8

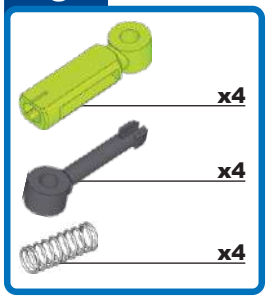
x4
x4
x4

x4

9 ⑧+

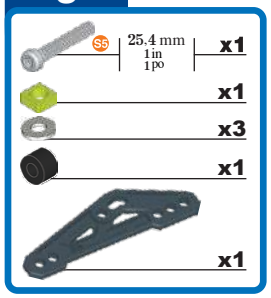
S5
25.4 mm
1in
1po
x1
x1
x3
x1
x1

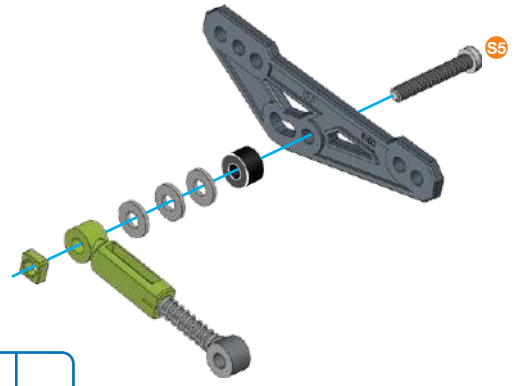
S5

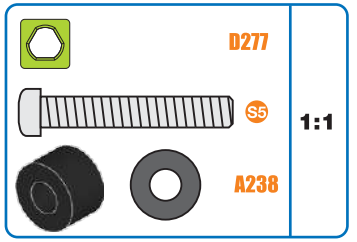
D277
S5
A238
1:1

10 ⑧+

S5 | 25.4 mm 1 in 1 po | x1
x1
x3
x1
x1

D277
S5
A238
1:1

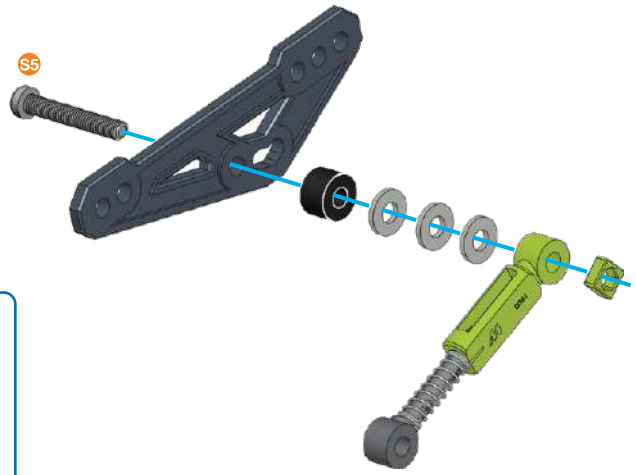

11

S1 | 5.8 mm 15/64 in 15/64 po | x1
x1
x1
x1

S1 1:1

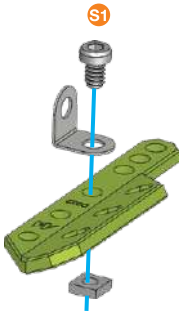

12 ⑨+⑪+

S2 | 9.5 mm 3/8 in 3/8 po | x1
B1 | 14.7 mm 37/64 in 37/64 po | x1
S4 | 19 mm 3/4 in 3/4 po | x1
x2
x1
x2
x1
x1
x1

S2
B1
S4
D277
1:1

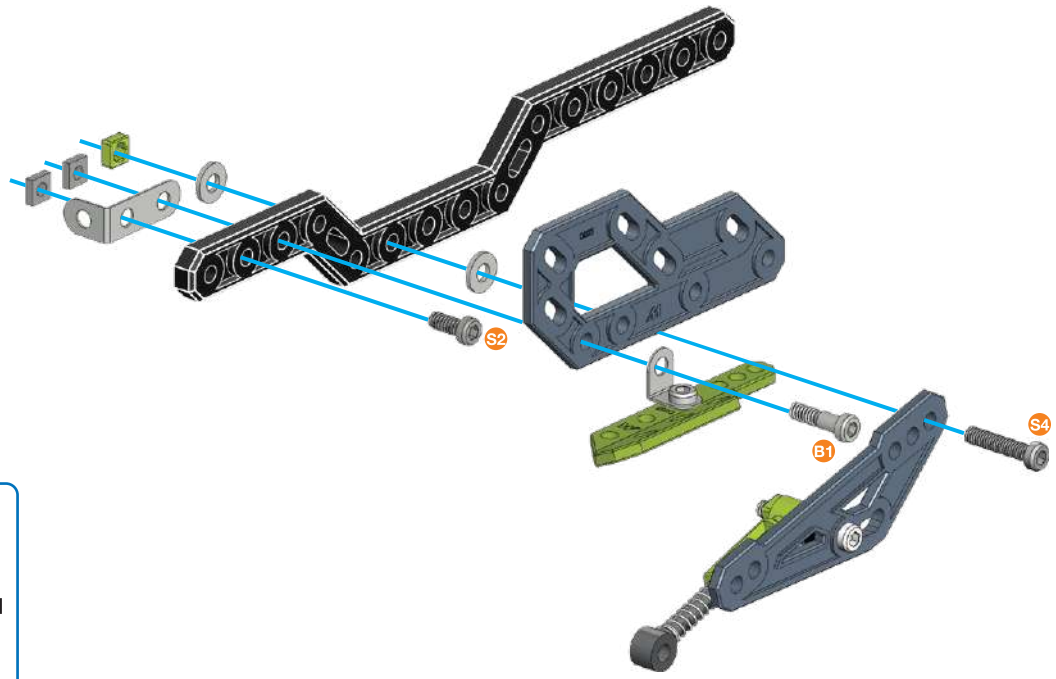

13

S2 | 9.5 mm 3/8 in 3/8 po | x2
x2
x2
x2

S2 1:1

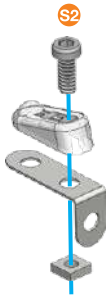

x2

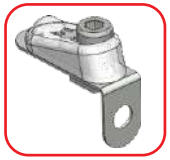

14 ⑧+⑫+⑬+

S3 12 mm 1/2 in 1/2 po x2
B2 19 mm 3/4 in 3/4 po x1
x2
x1
x1
x1

S3
B2
D277
1:1

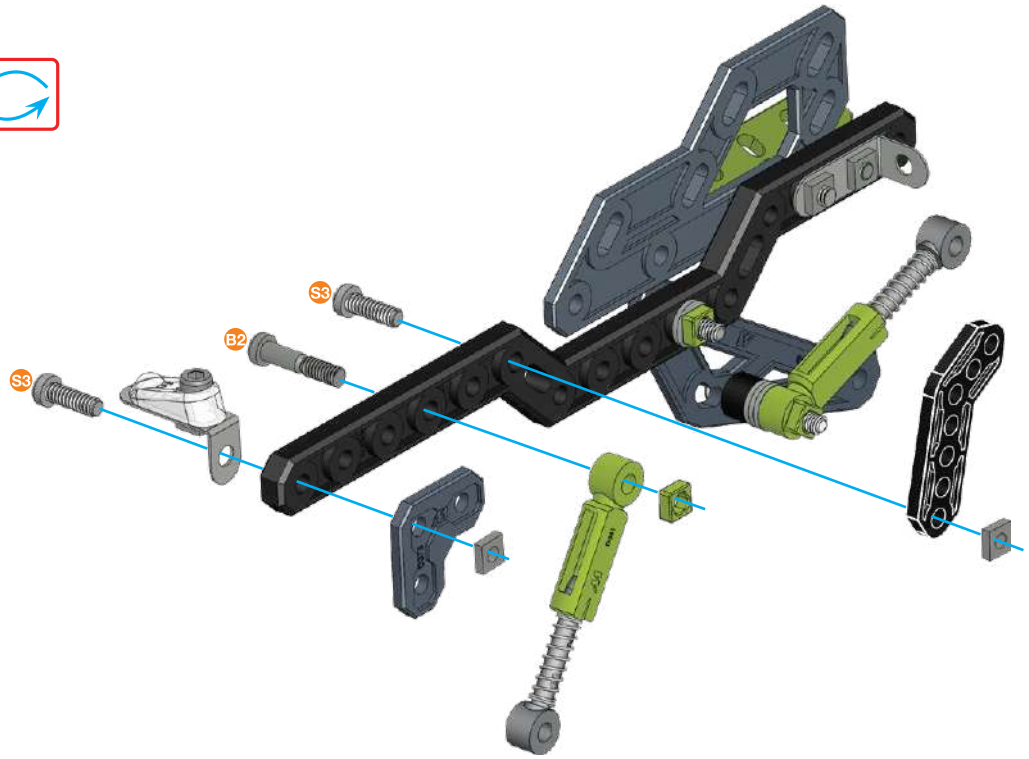

15

S1 5.8 mm 15/64 in 15/64 po x1
x1
x1
x1

S1
1:1

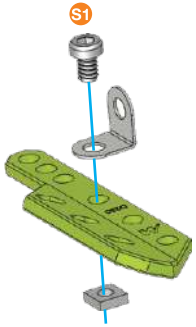

16 ⑩+⑮+

S2 9.5 mm 3/8 in 3/8 po x1
B1 14.7 mm 37/64 in 37/64 po x1
S4 19 mm 3/4 in 3/4 po x1
x2
x1
x2
x1
x1
x1

S2
B1
S4
D277
1:1

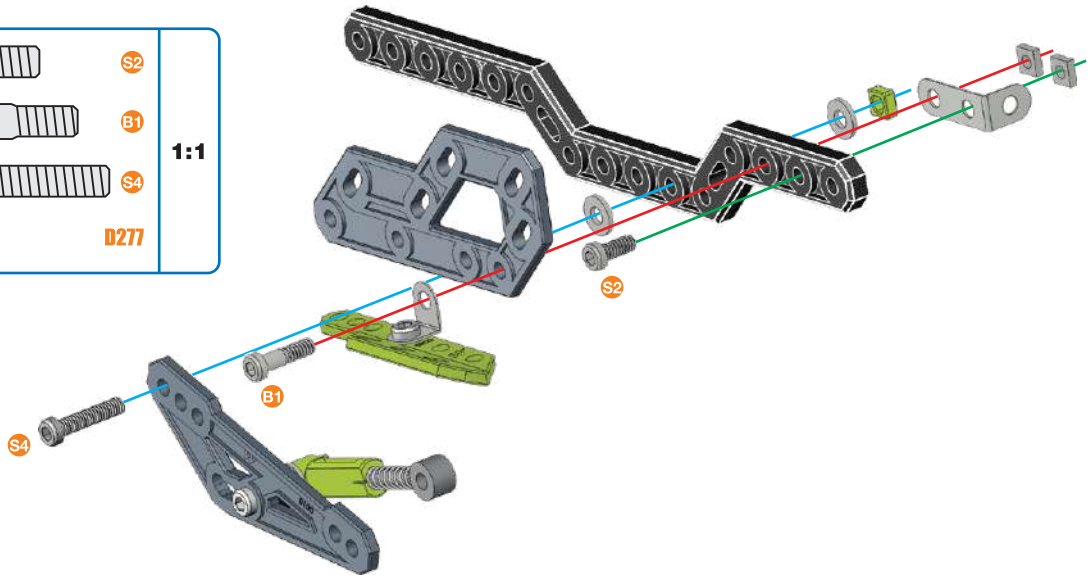

17 ⑧+⑬+⑯+

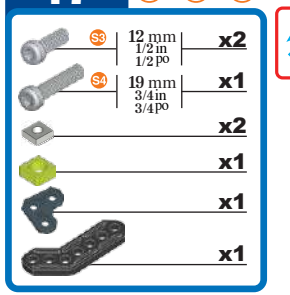

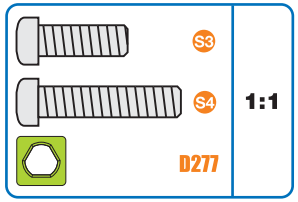

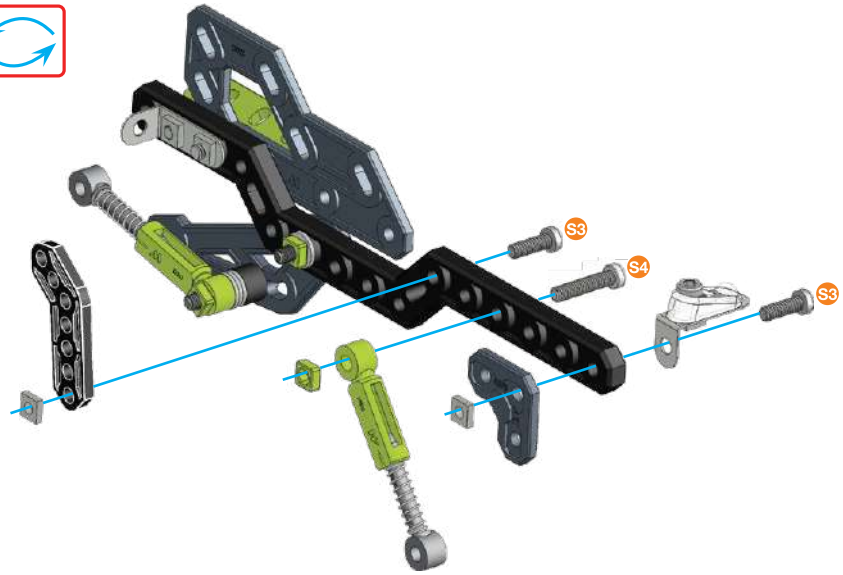

18 ⑥+⑦+

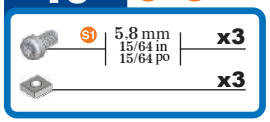

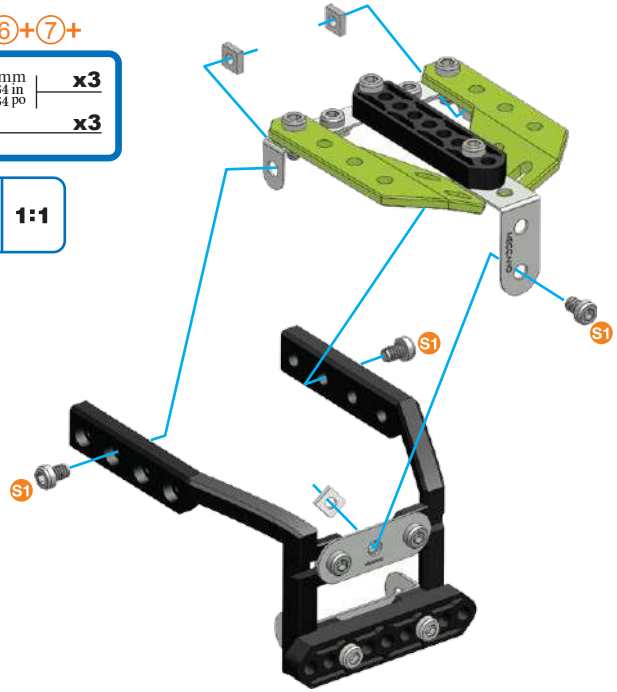

19 ②+⑭+

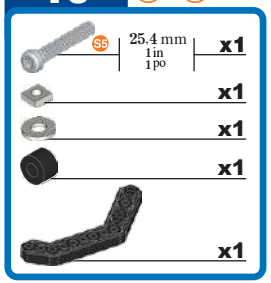

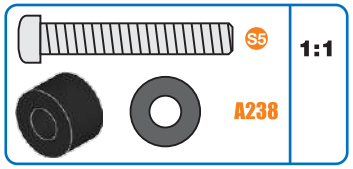

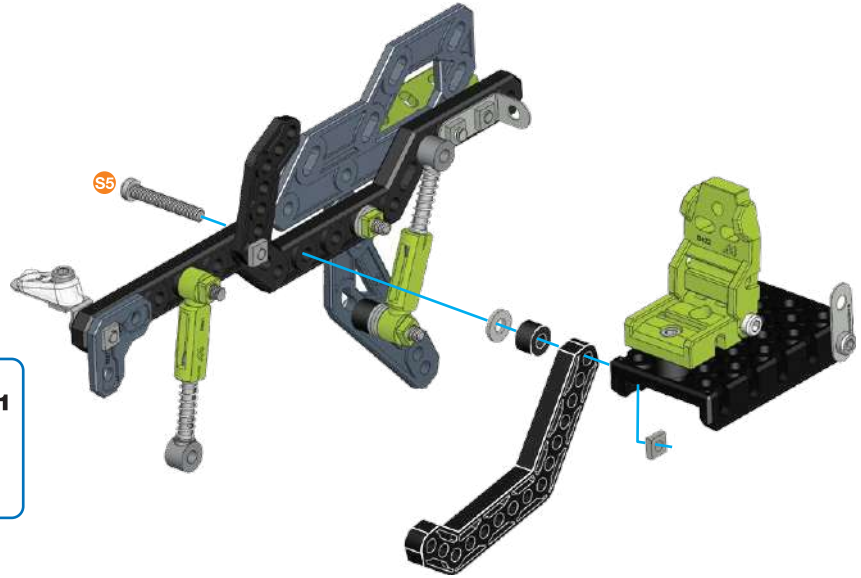

20

⑰+⑲+

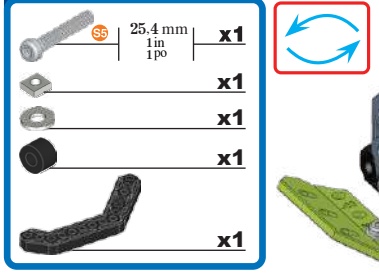
S5
25,4 mm
1 in
1 po
x1
x1
x1
x1
x1

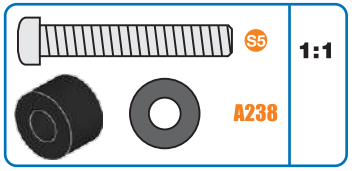
S5
A238
1:1

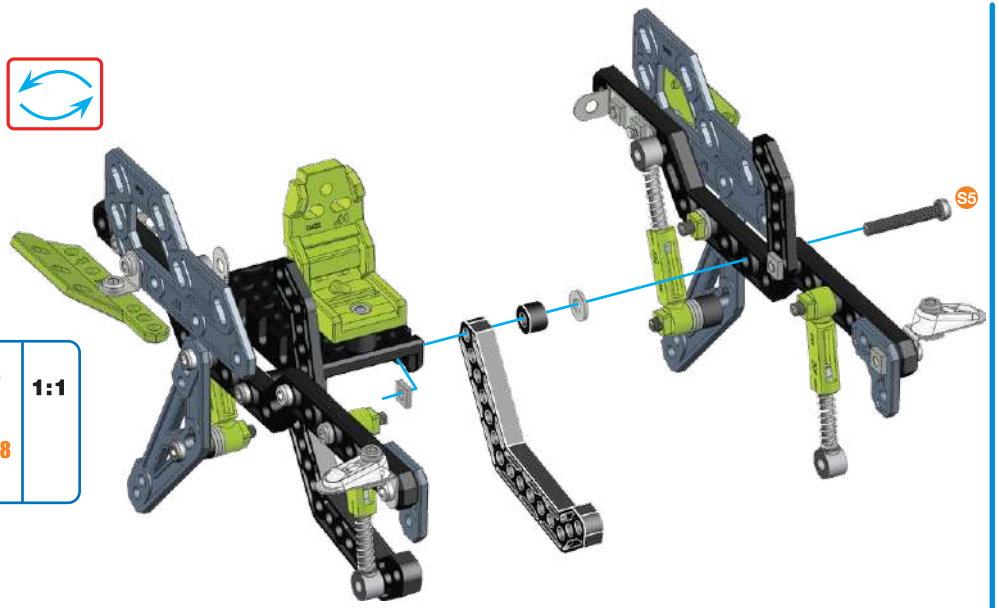
S5

21

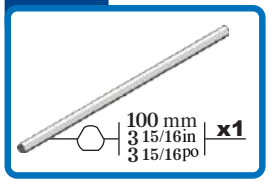
100 mm
3 15/16in
3 15/16po
x1

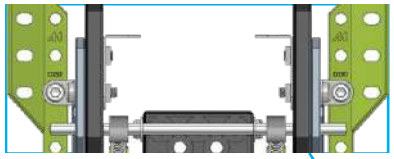

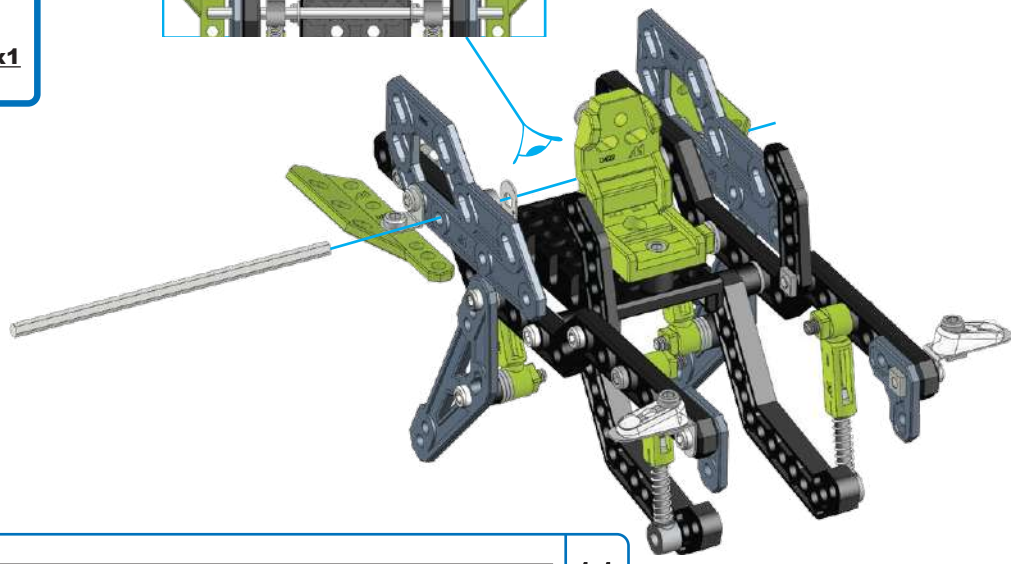

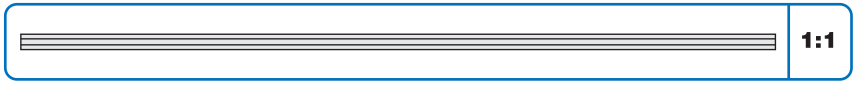
1:1

22

⑱+㉑+

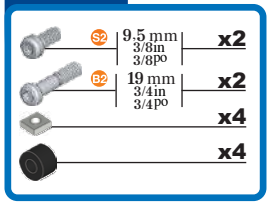
S2
9,5 mm
3/8in
3/8po
x2
B2
19 mm
3/4in
3/4po
x2
x4
x4

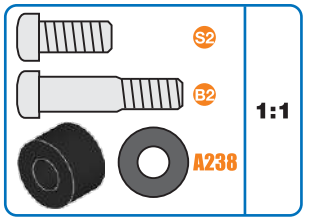
S2
B2
A238
1:1

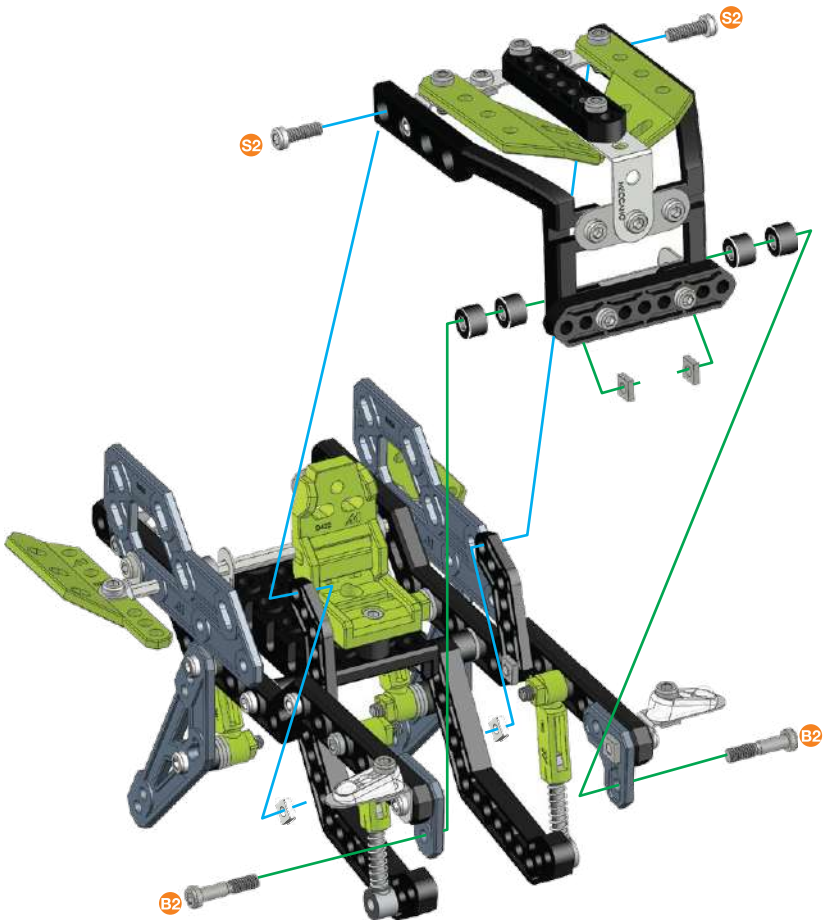
S2
S2
B2
B2

23 ⑤+㉒+

S2 | 9.5 mm 3/8in 3/8po | x2

x2

S2 | 1:1

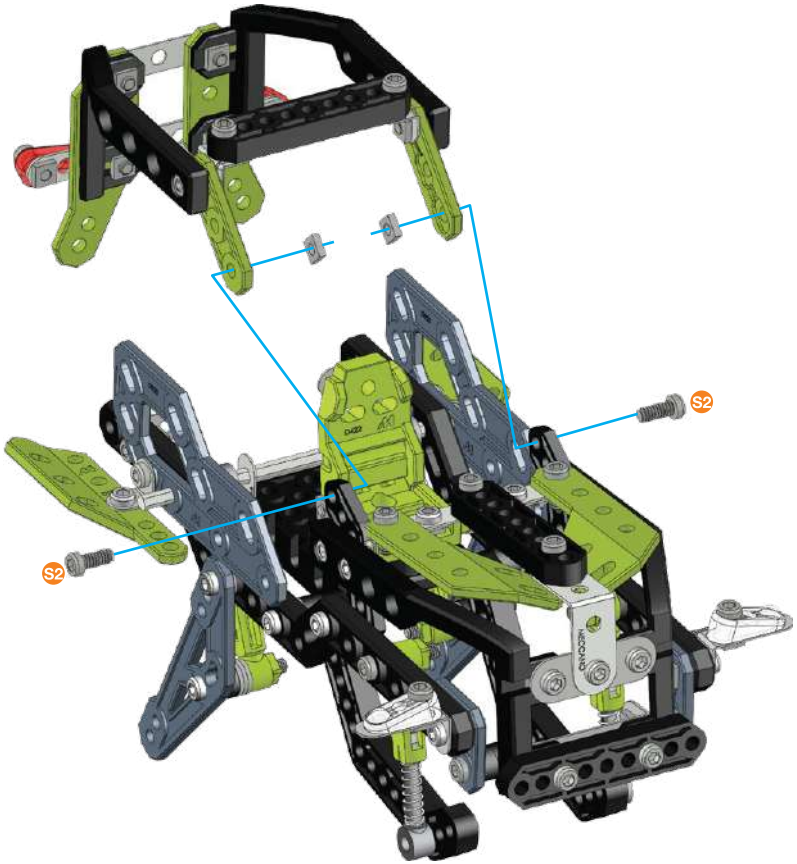

24

S1 | 5.8 mm 15/64 in 15/64 po | x2

x2

S1 | 1:1

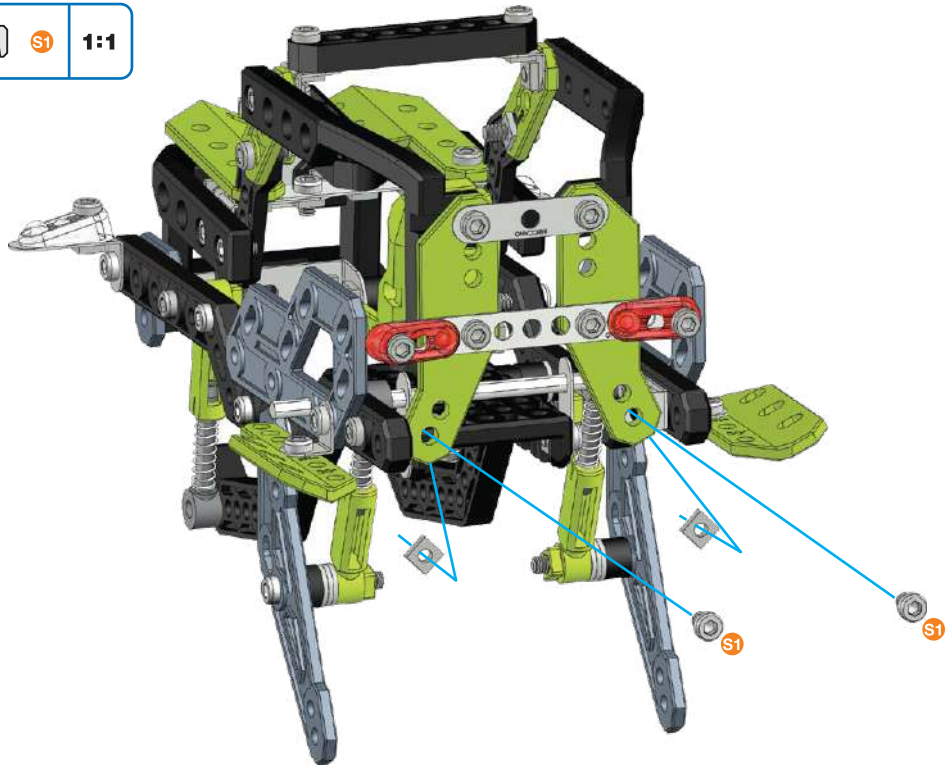

25

x4

x4

x4

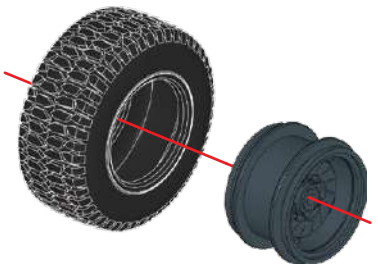

26 ㉔+㉕+

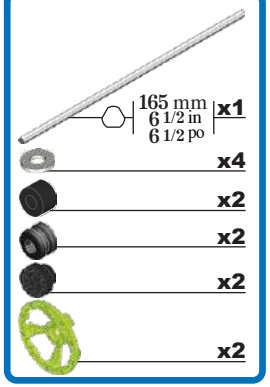
165 mm
6 1/2 in
6 1/2 po
x1
x4
x2
x2
x2
x2

A238
1:1

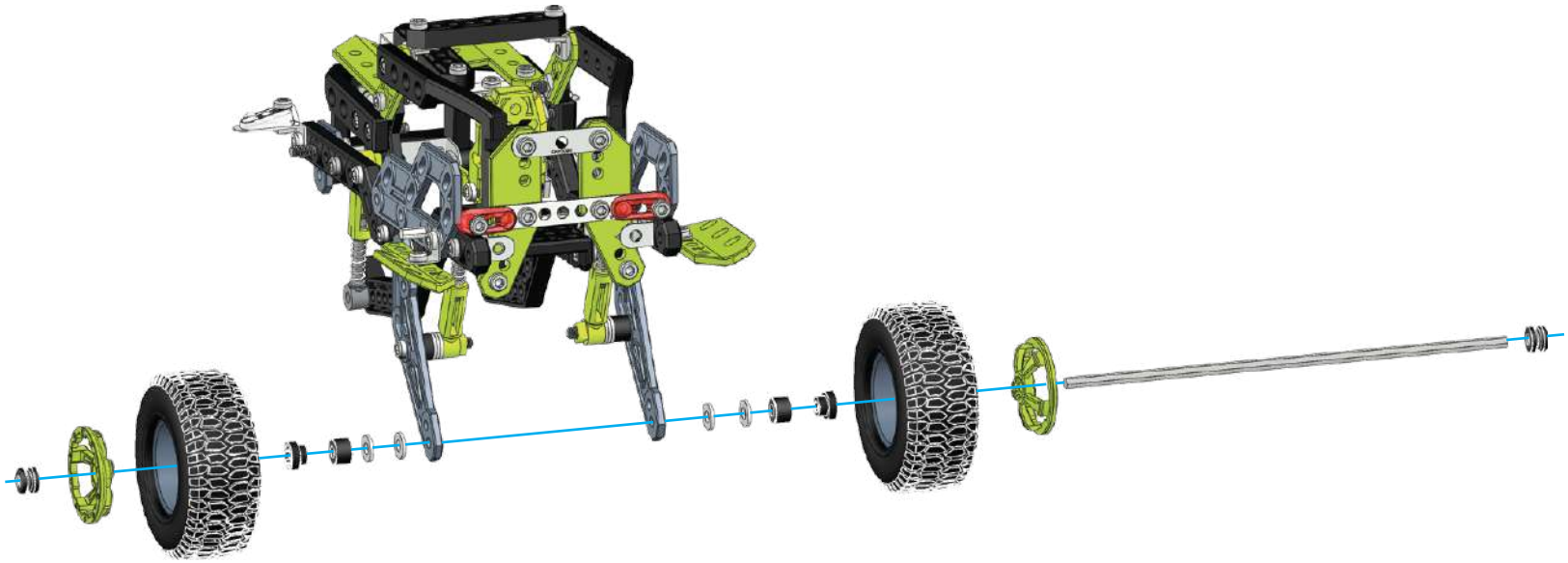

1:1

27 ㉕+㉖+

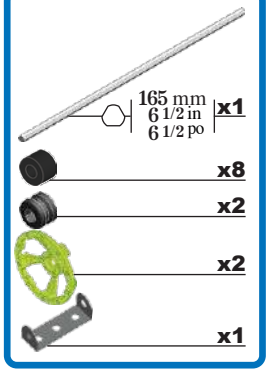
165 mm
6 1/2 in
6 1/2 po
x1
x8
x2
x2
x1

A238
1:1

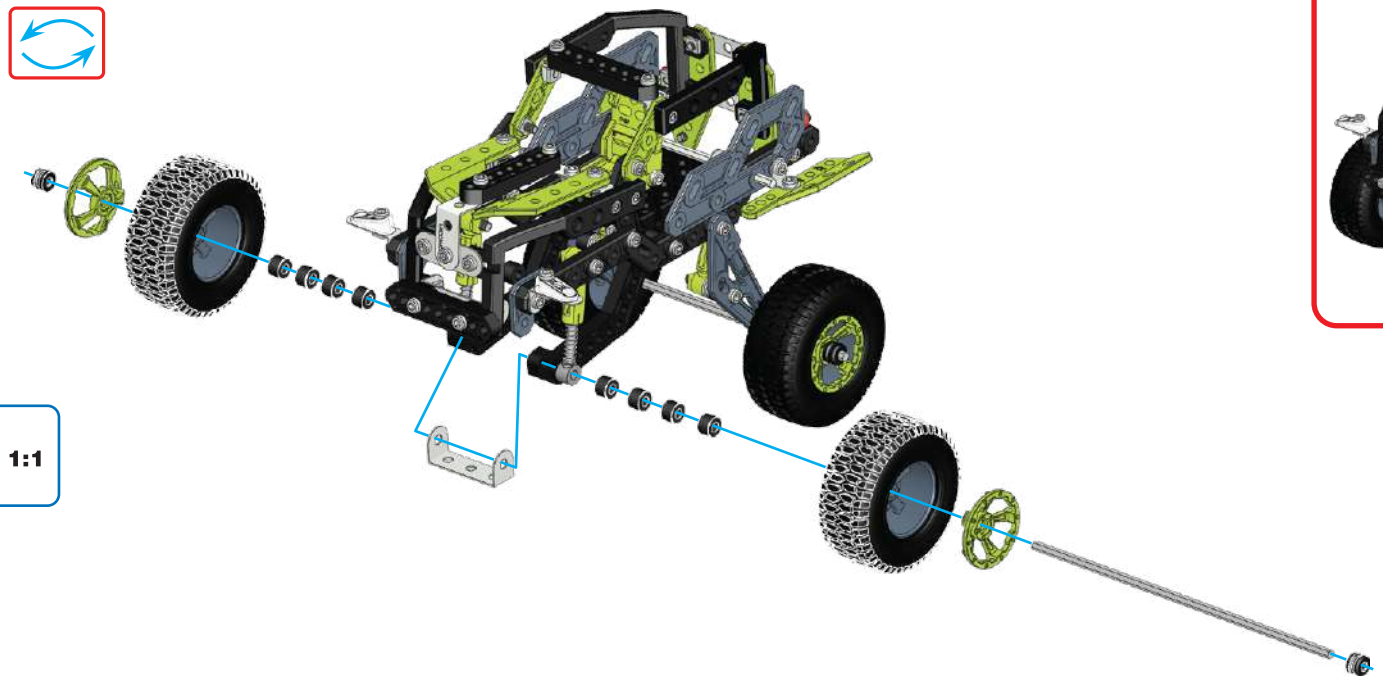

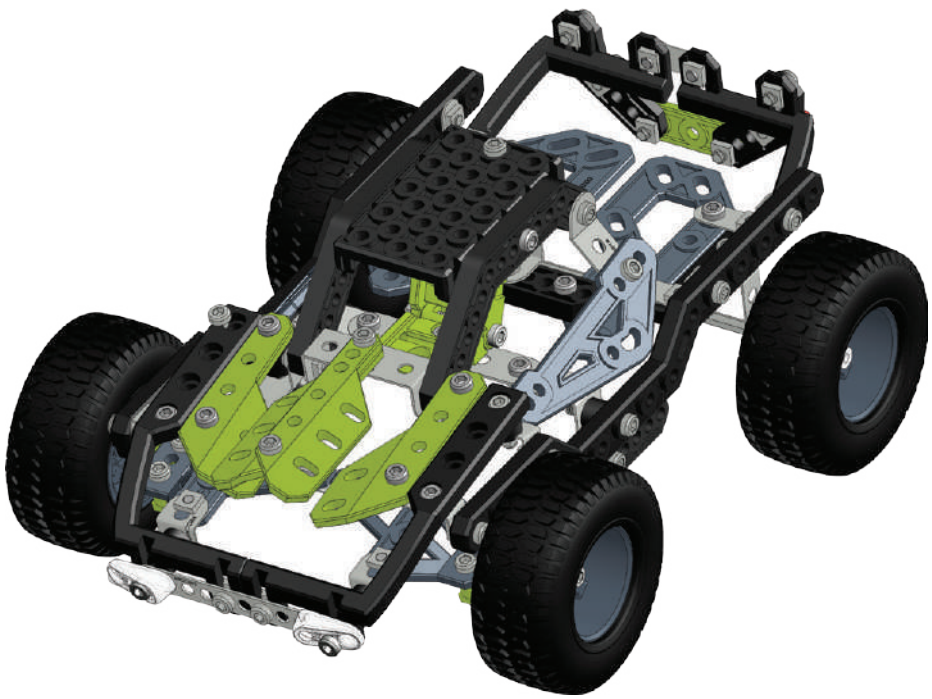

1

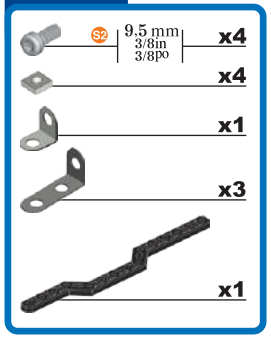
S2
9.5 mm
3/8in
3/8po
x4
x4
x1
x3
x1

S2
1:1

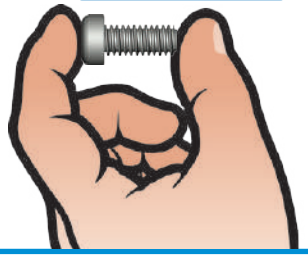

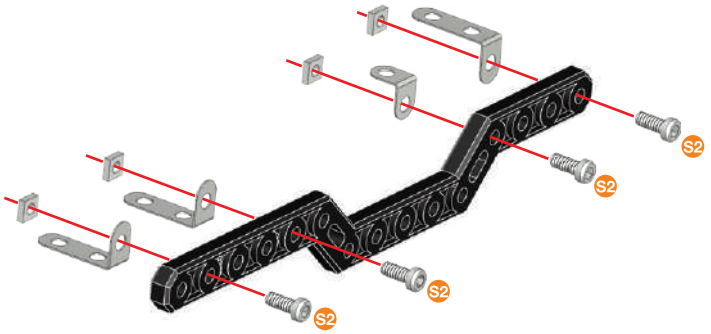
S2
S2
S2
S2

2

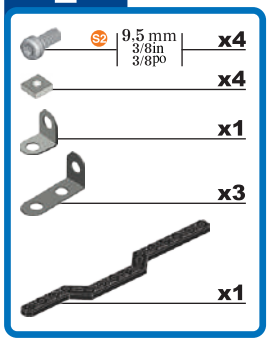
S2
9.5 mm
3/8in
3/8po
x4
x4
x1
x3
x1

S2
1:1

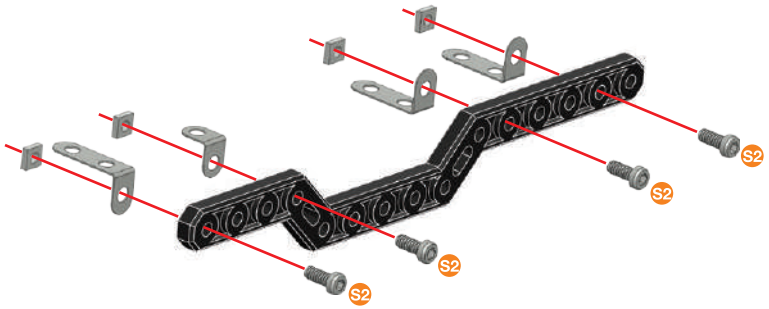
S2
S2
S2
S2

3

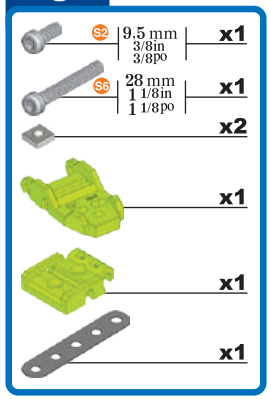
S2
9.5 mm
3/8in
3/8po
x1
S6
28 mm
1 1/8in
1 1/8po
x1
x2
x1
x1
x1

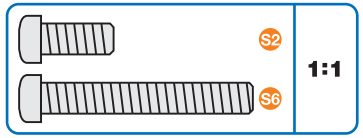
S2
S6
1:1

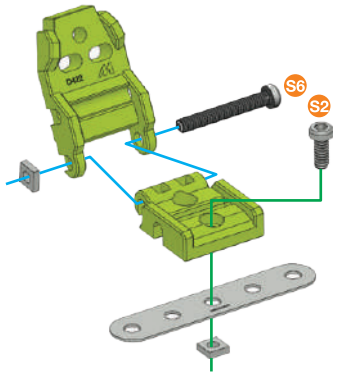
S6
S2

4

S1 5.8 mm 15/64 in 15/64 po — x2
x2
x2

S1 — 1:1

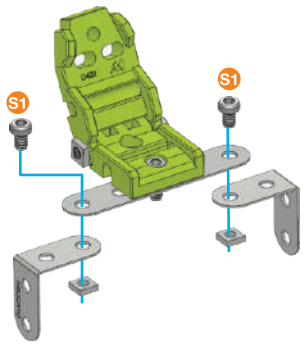

5 ①+②+④+

B2 19 mm 3/4 in 3/4 po — x2
x2
x2

B2 A238 — 1:1

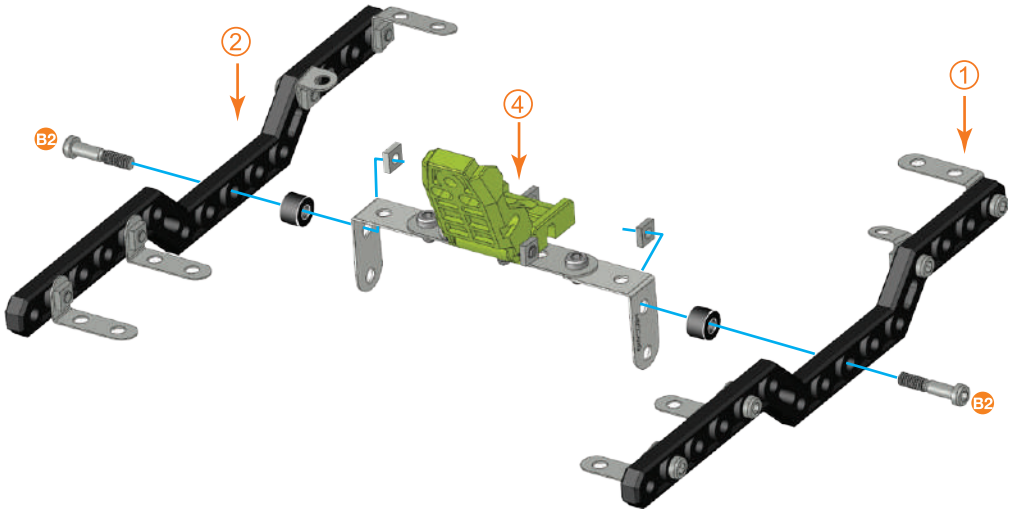

6

S1 5.8 mm 15/64 in 15/64 po — x4
x4
x2

S1 — 1:1

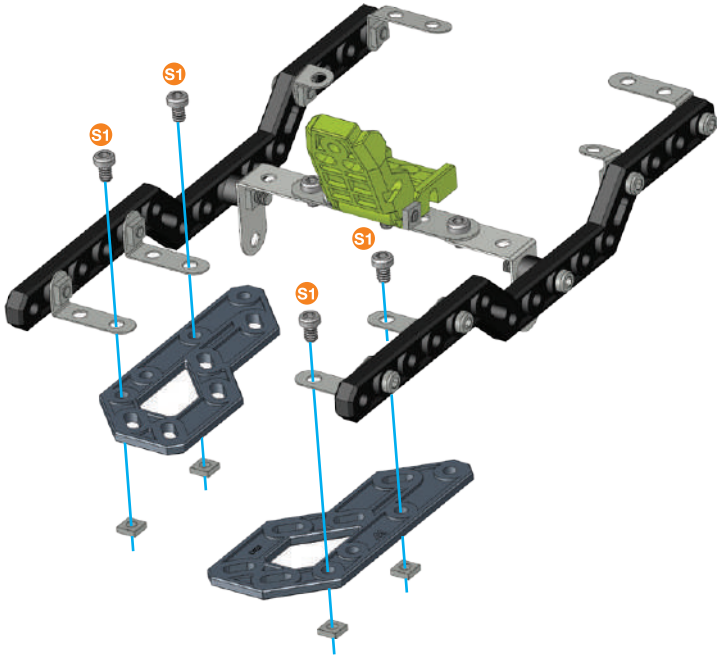

7

S2 9.5 mm 3/8 in 3/8 po — x1
S3 12 mm 1/2 in 1/2 po — x2
x3
x1
x1

S2
S3 — 1:1

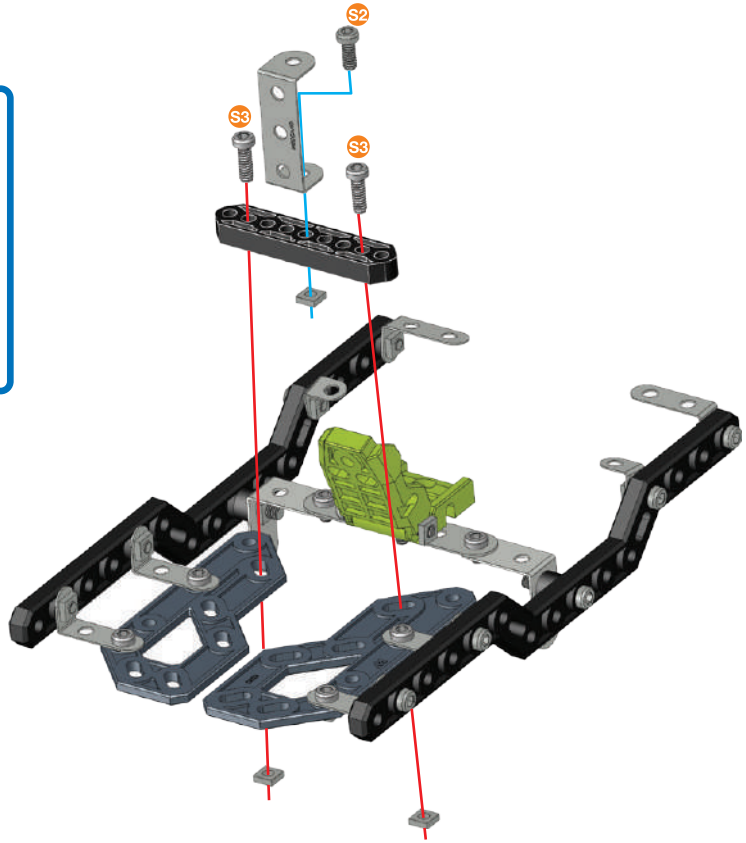

8

S2 | 9.5 mm 3/8in 3/8po | x1
S3 | 12 mm 1/2in 1/2po | x1
x2
x1
x1

S2
S3
1:1

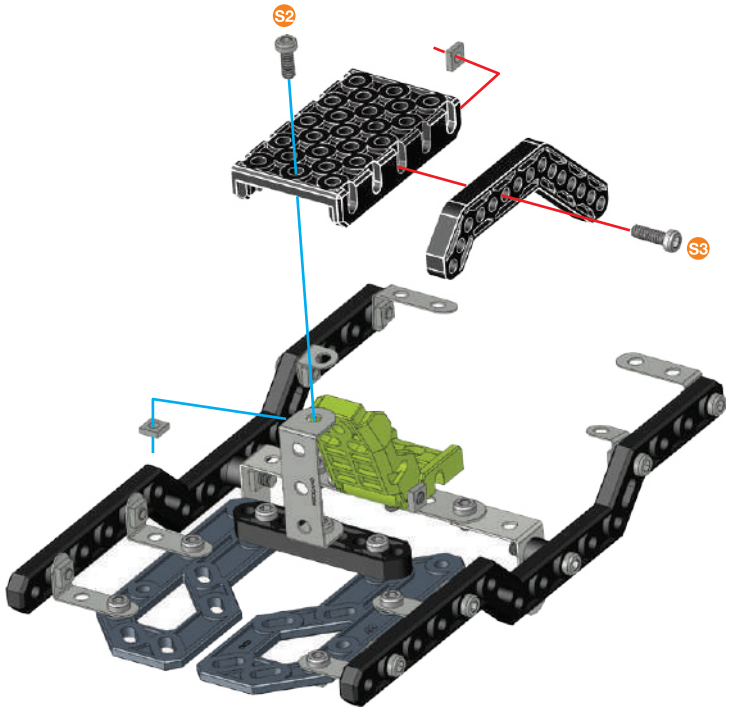

9

S3 | 12 mm 1/2in 1/2po | x1
x1
x1

S3
1:1

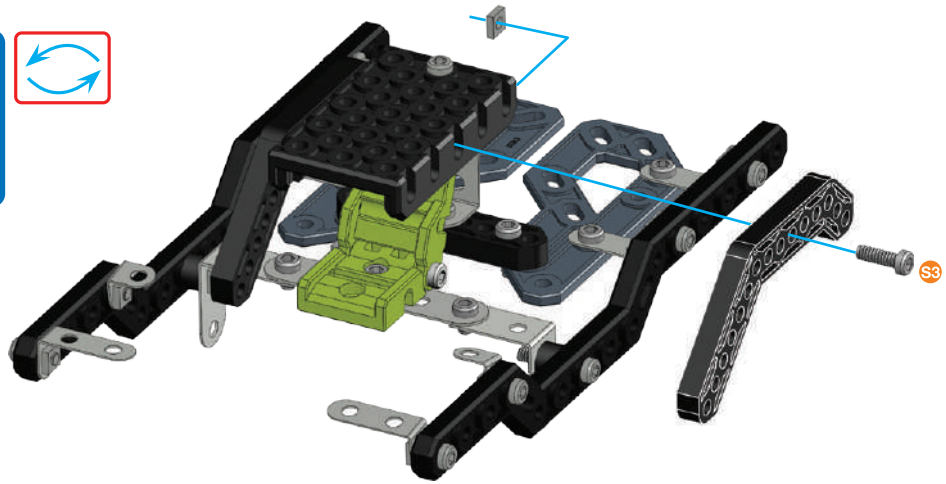

10

S2 | 9.5 mm 3/8in 3/8po | x3
x3
x1
x1
x1
x1

S2
1:1

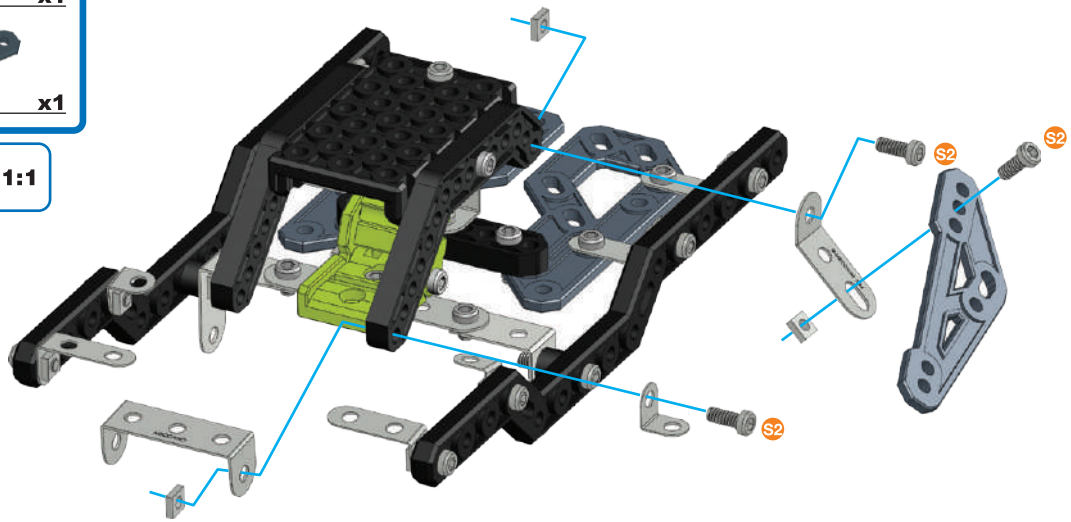

11

S2 | 9.5 mm 3/8in 3/8po | x3
x3
x1
x1
x1

S2 | 1:1

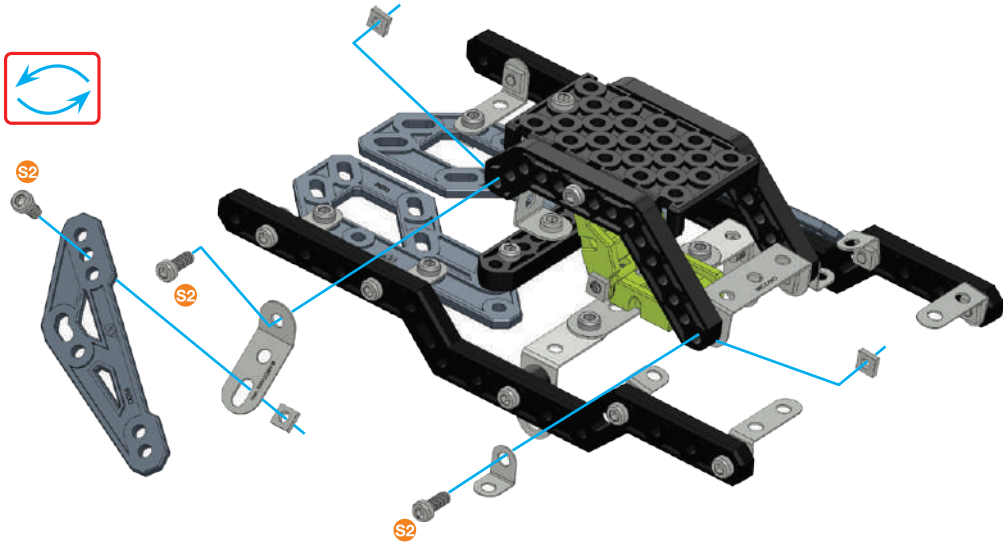

12

S1 | 5.8 mm 15/64 in 15/64 po | x6
x6
x2
x1
x2
x1
x1

S1 | 1:1

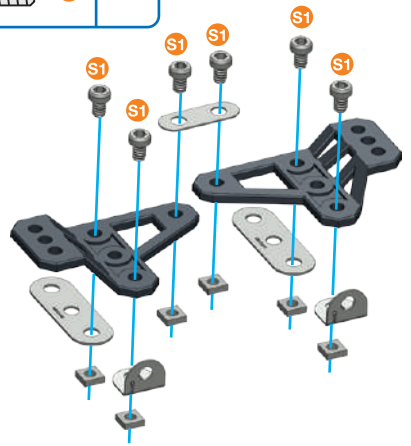

13

B1 | 14.7 mm 37/64 in 37/64 po | x4
x4
x2

B1 | D277 | 1:1

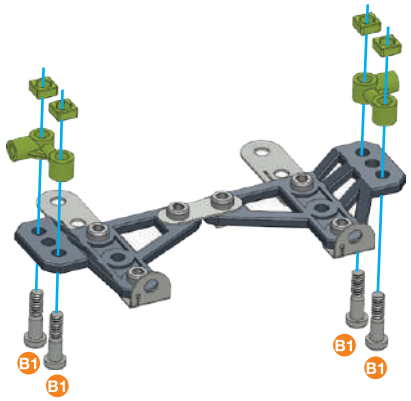

14 ⑪+⑬+

S4 | 19 mm 3/4 in 3/4 po | x1
x1
x2
x1

S4 | A238 | 1:1

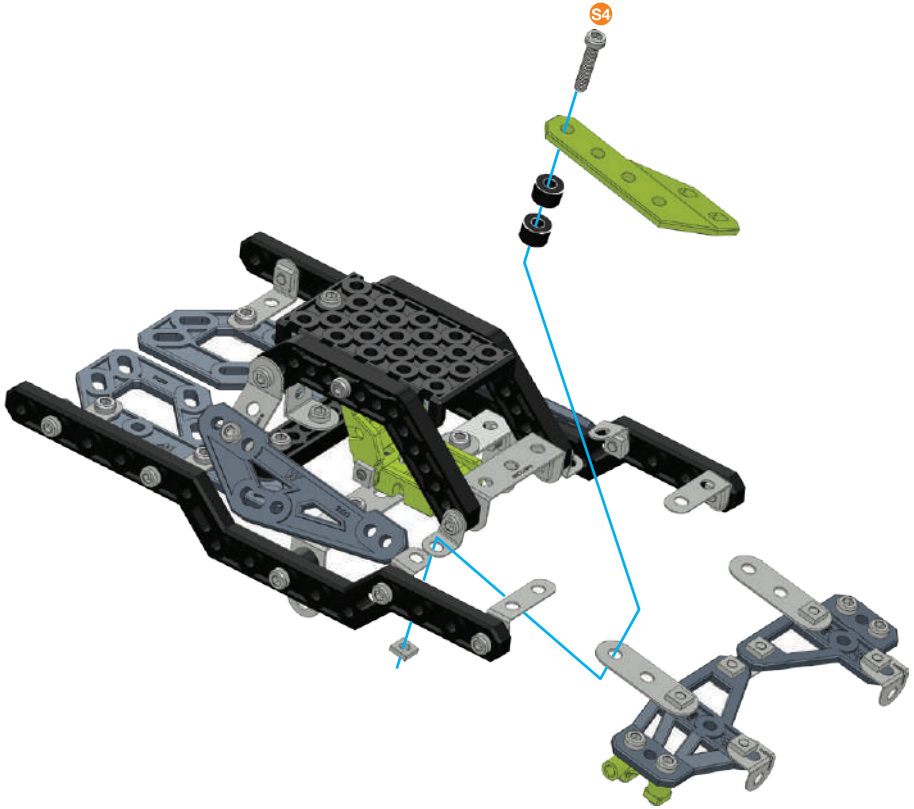

15

S1 | 5.8 mm 15/64 in 15/64 po | x1

x1

S1 | 1:1

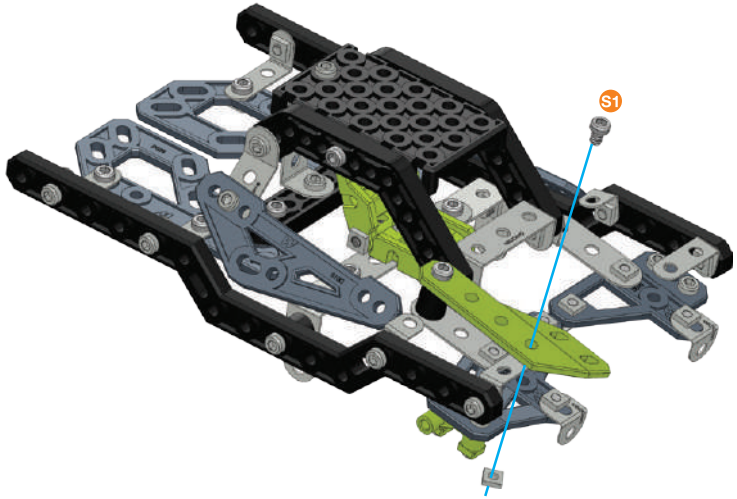

16

S4 | 19 mm 3/4 in 3/4 po | x1

x1

x2

x1

S4 | A238 | 1:1

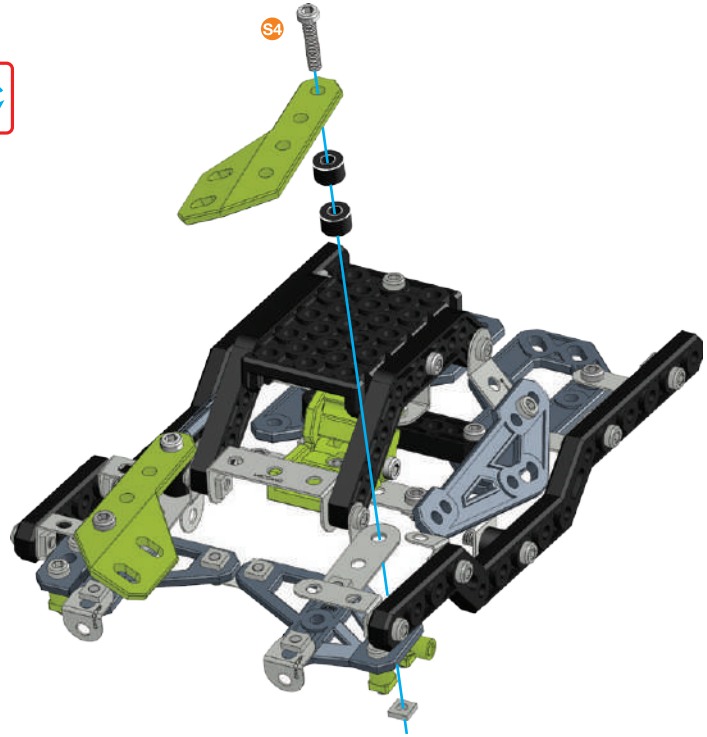

17

S1 | 5.8 mm 15/64 in 15/64 po | x1

x1

S1 | 1:1

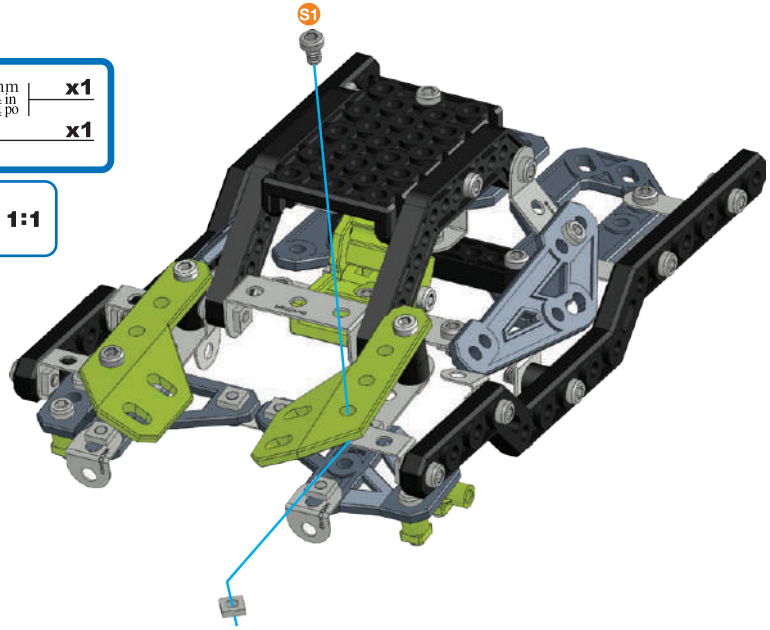

18

S2 | 9.5 mm 3/8 in 3/8 po | x2

x2

x1

x1

S2 | 1:1

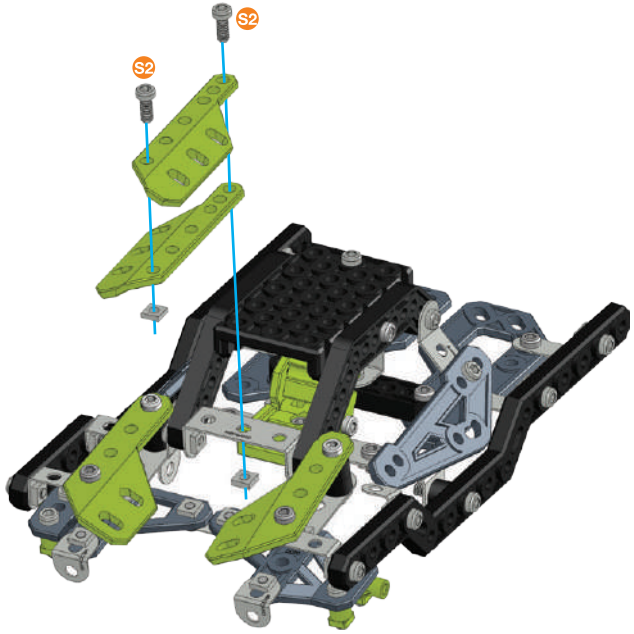

19

S2 | 9.5 mm 3/8in 3/8po | x2
x2
x1
x1
x1

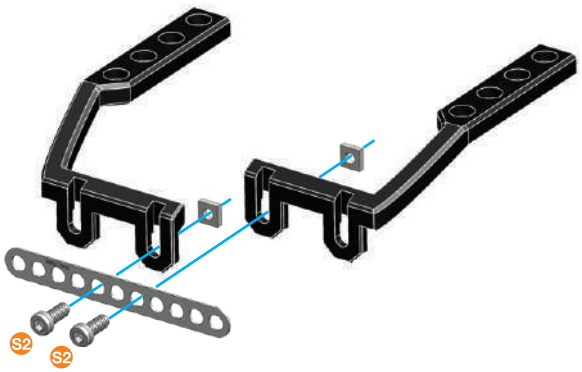

S2 | 1:1

20 ⑱+⑲+

S5 | 25.4 mm 1in 1po | x2
x4
x2
x2

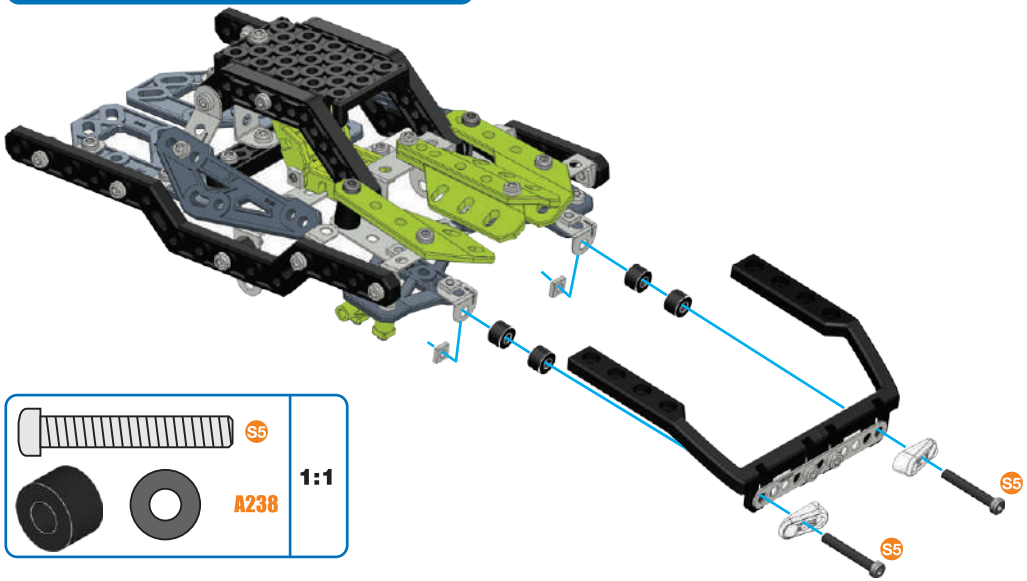

S5 | A238 | 1:1

21

S1 | 5.3 mm 15/64 in 15/64 po | x1
B1 | 14.7 mm 37/64 in 37/64 po | x1
x2
x1

S1
B1
A238 | 1:1

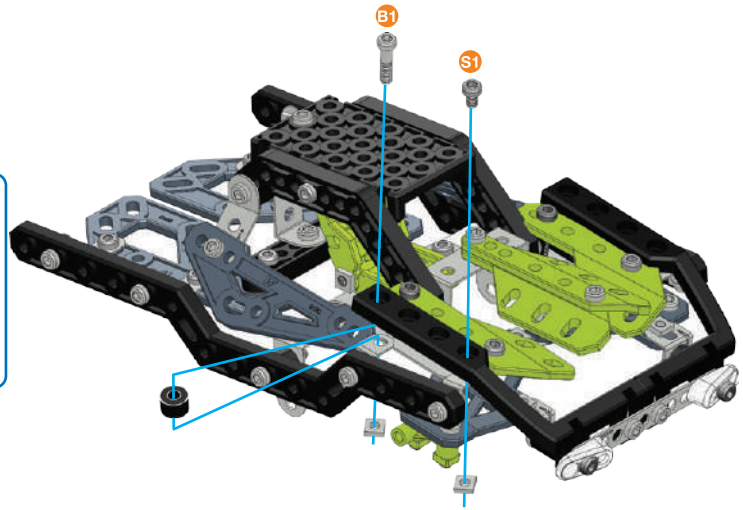

22

S1 | 5.3 mm 15/64 in 15/64 po | x1
B1 | 14.7 mm 37/64 in 37/64 po | x1
x2
x1

S1
B1
A238 | 1:1

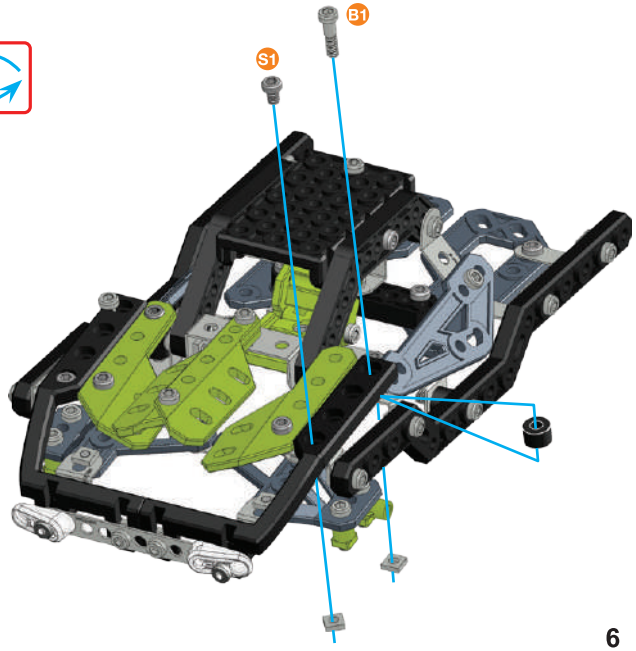

23

S1 5.8 mm 15/64 in 15/64 po x2
S2 9.5 mm 3/8in 3/8po x1
x3
x1
x1

S1
S2
1:1

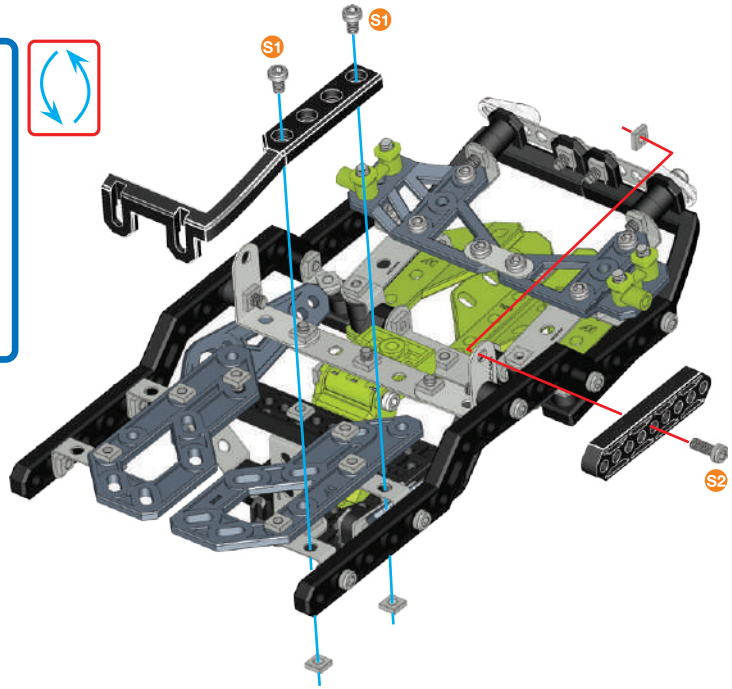

24

S1 5.8 mm 15/64 in 15/64 po x2
S2 9.5 mm 3/8in 3/8po x1
x3
x1
x1

S1
S2
1:1

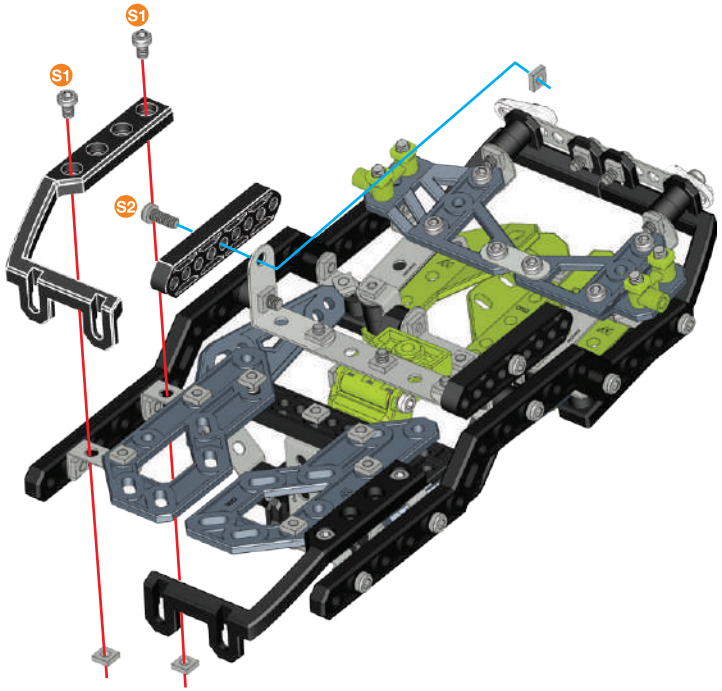

25

S2 9.5 mm 3/8in 3/8po x2
x2
x2

S2
1:1

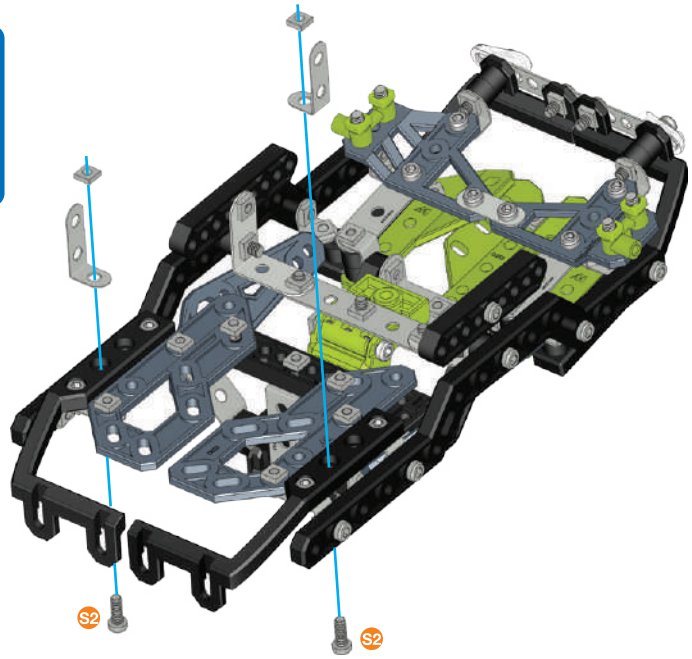

26

S1 5.8 mm 15/64 in 15/64 po x2
S2 9.5 mm 3/8in 3/8po x4
x6
x1
x1
x2

S1
S2
1:1

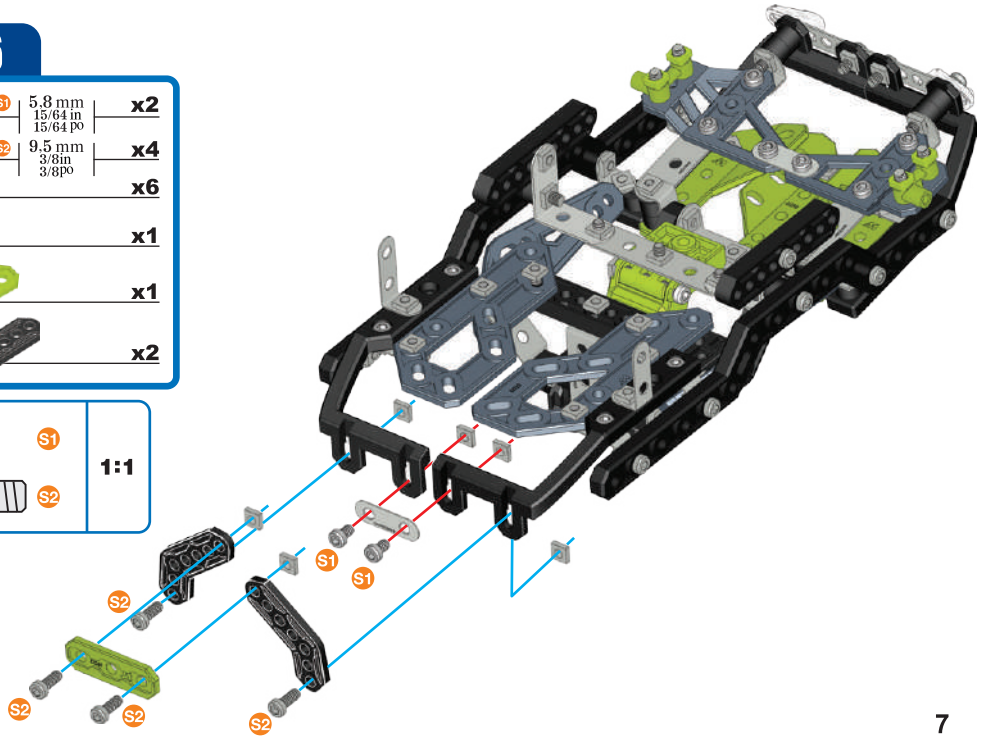

27

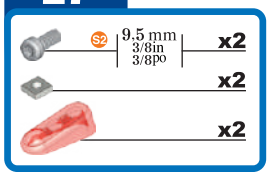

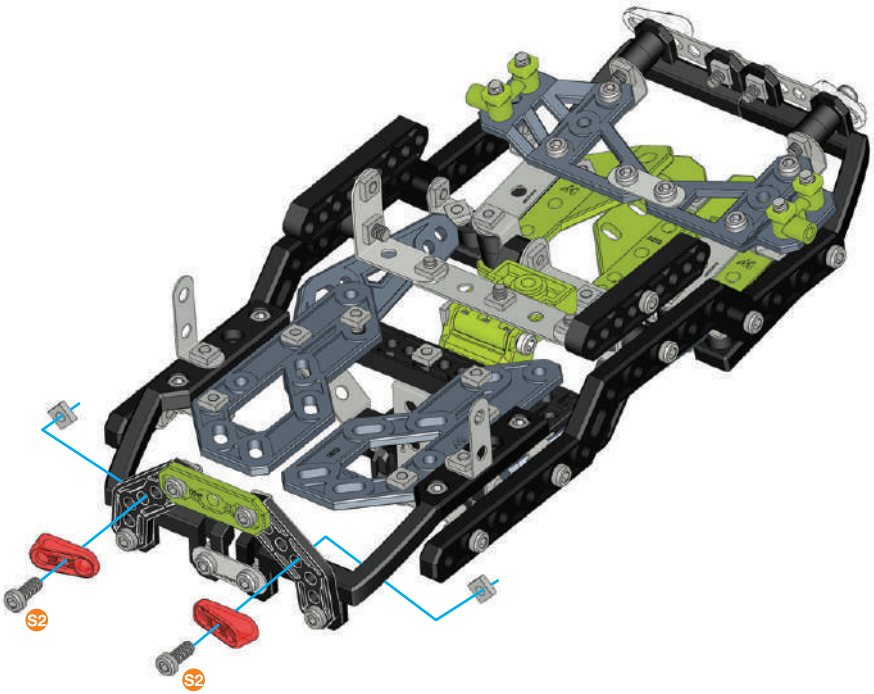

28

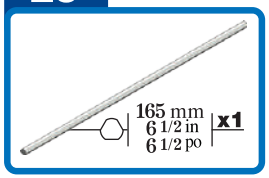

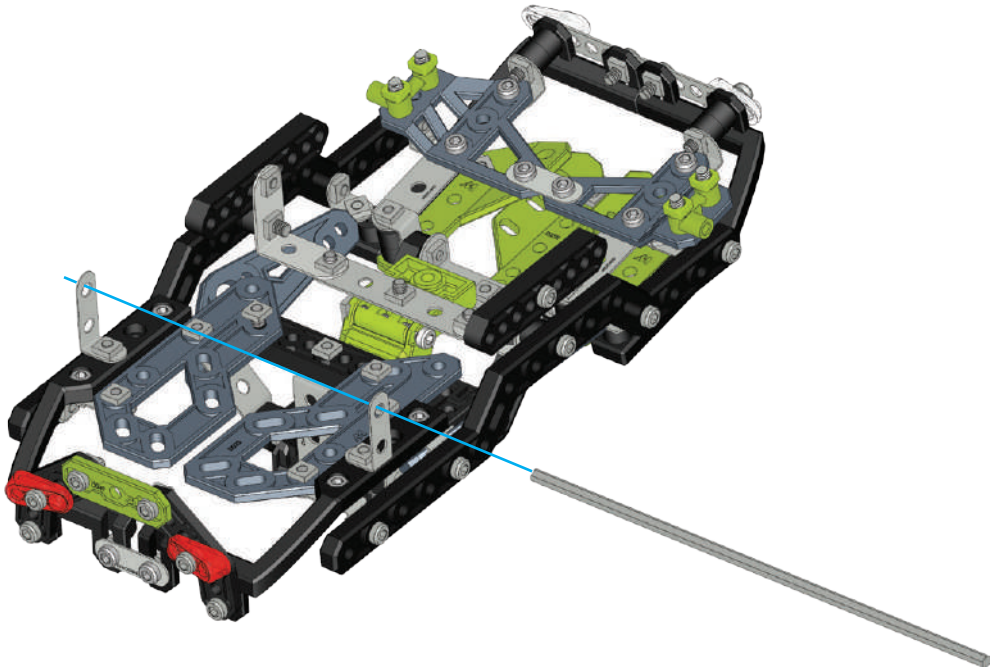

29

x4

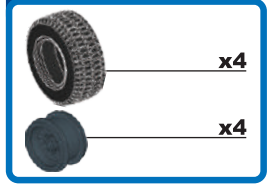

x4

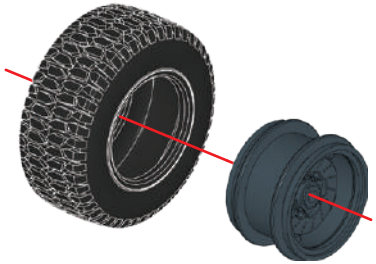

30 (28)+(29)+

x2

x4

x2

A238 1:1

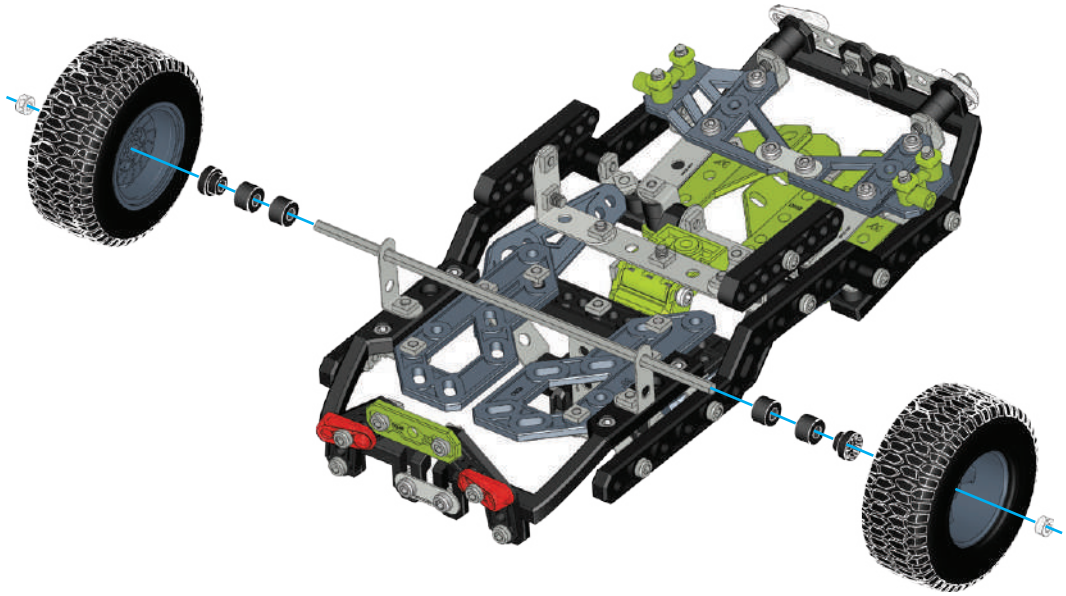

31 (29)+(30)+

S5 25.4 mm 1 in 1 po x2

x2

x4

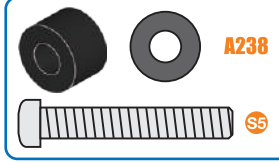

A238 1:1

S5

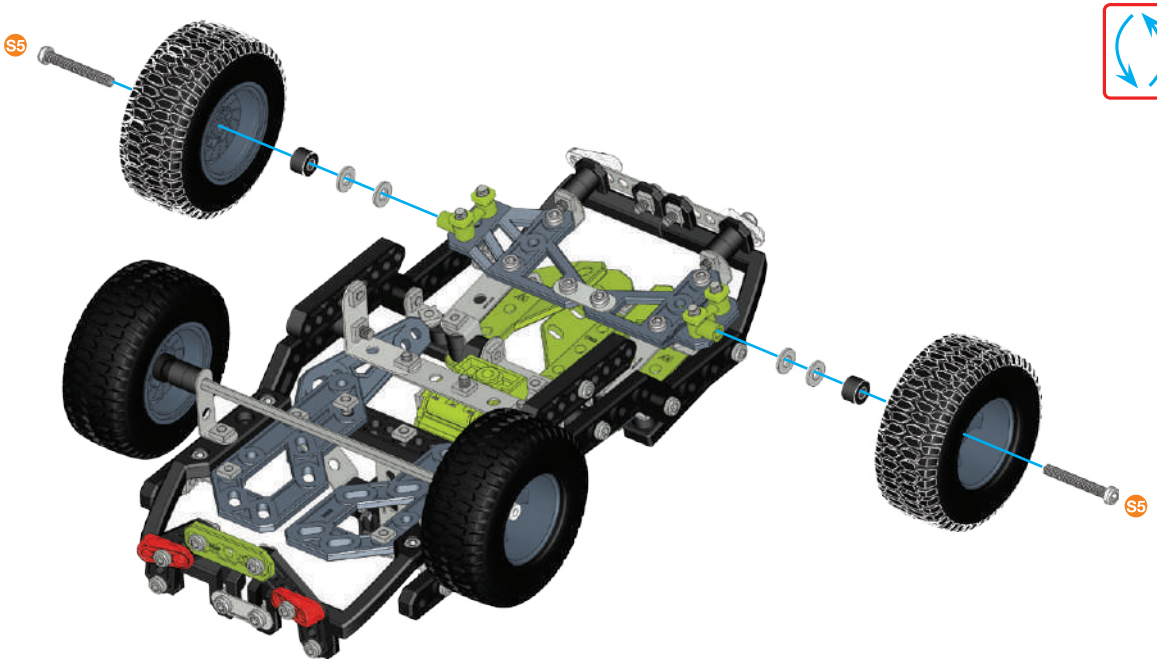

S5

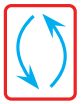

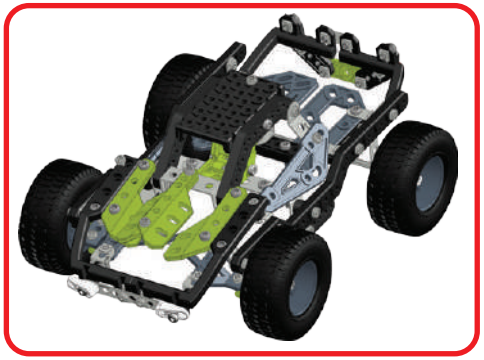

1

- S2 9.5 mm 3/8in 3/8po — x1
- B1 14.7 mm 37/64in 37/64po — x1
- S4 19 mm 3/4in 3/4po — x2
- x4
- x2
- x2
- x1
- x1
- x1

S2 B1 S4 A238 — 1:1

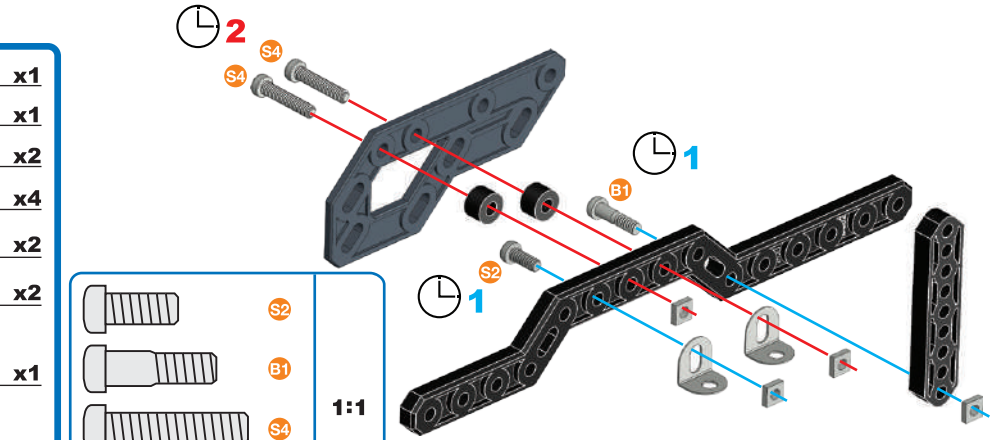

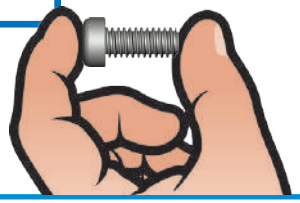

2

- S2 9.5 mm 3/8in 3/8po — x1
- B1 14.7 mm 37/64in 37/64po — x1
- B2 19 mm 3/4in 3/4po — x2
- x4
- x2
- x2
- x1
- x1
- x1

S2 B1 B2 A238 — 1:1

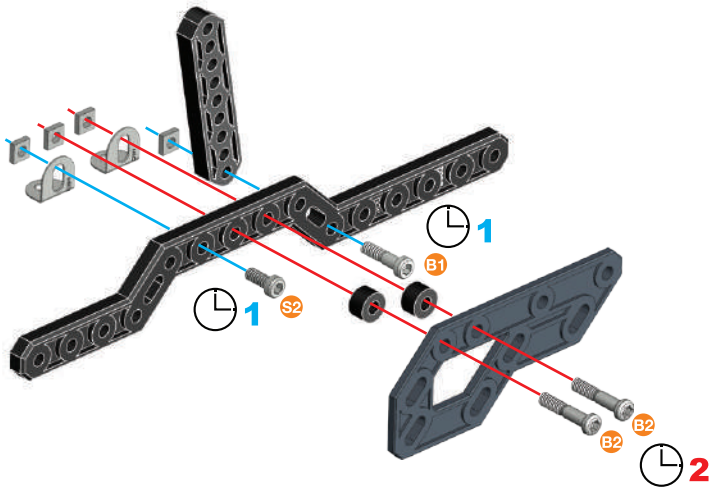

3 ①+②+

S1 | 5.8 mm 15/64 in 15/64 po | x4

x4

x1

S1 | 1:1

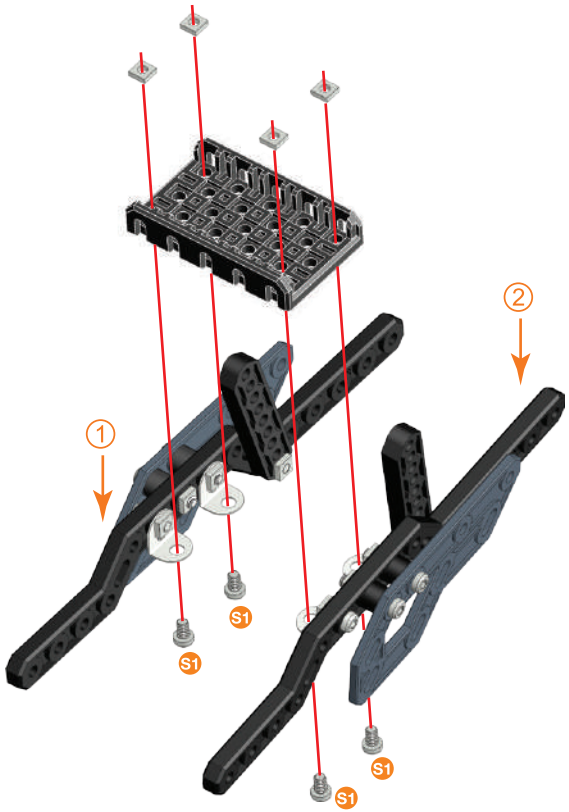

4

S6 | 28 mm 1 1/8 in 1 1/8 po | x1

x1

x1

x1

S6 | 1:1

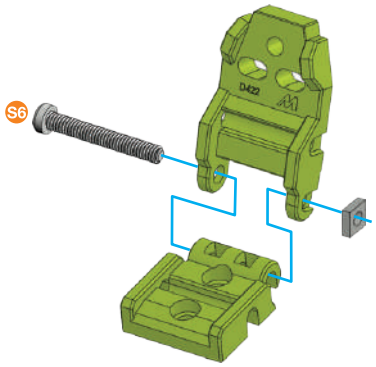

5 ③+④+

S4 | 19 mm 3/4 in 3/4 po | x1

x1

x1

x1

S4 | A238 | 1:1

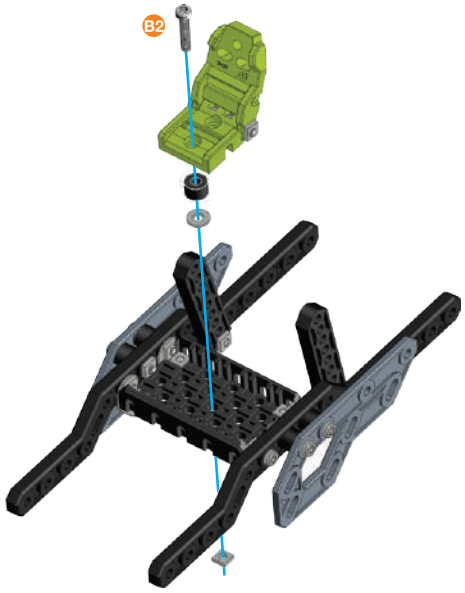

6

S2 | 9.5 mm 3/8 in 3/8 po | x2

x2

x2

S2 | 1:1

7

S1 | 5.8 mm 15/64 in 15/64 po | x2
x2
x2

S1 | 1:1

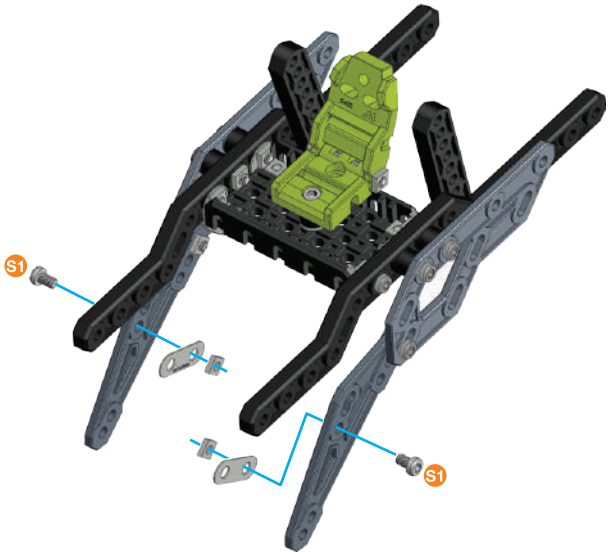

8

S2 | 9.5 mm 3/8 in 3/8 po | x4
x4
x4

S2 | 1:1

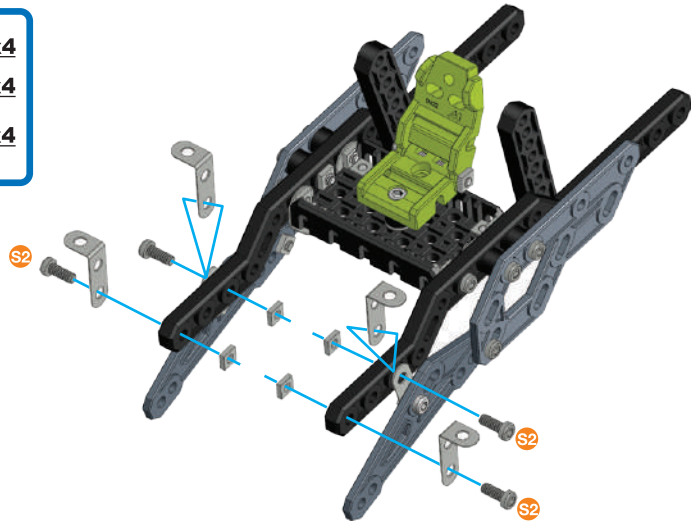

9

S1 | 5.8 mm 15/64 in 15/64 po | x4
x4
x1
x1

S1 | 1:1

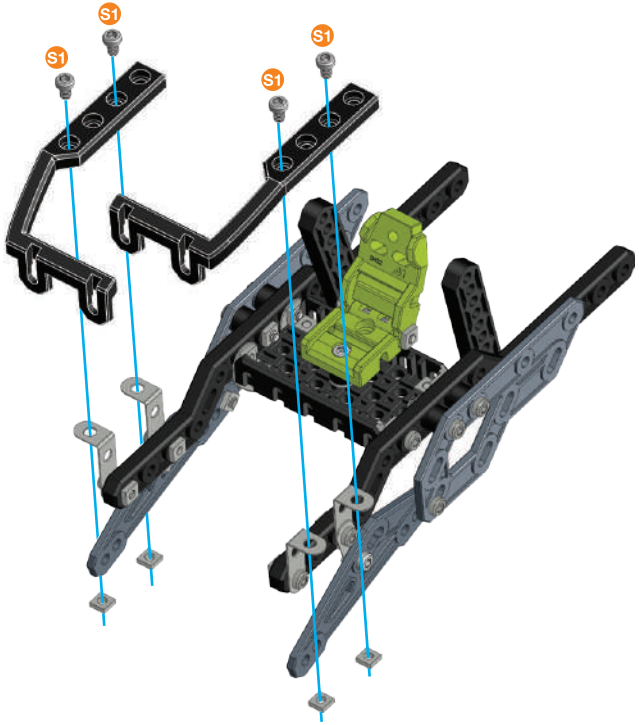

10

B1 | 14.7 mm 37/64 in 37/64 po | x2
x2
x2
x1
x1

B1 | 1:1

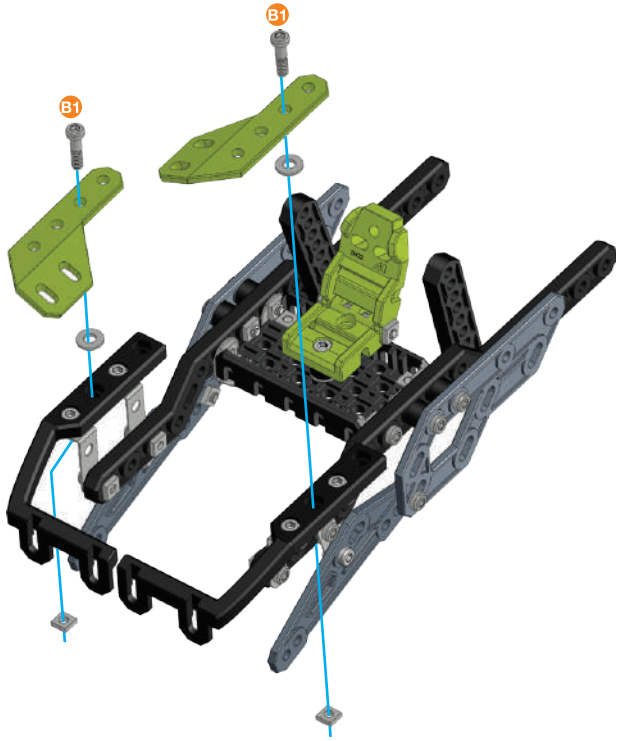

11

S1 5.8 mm 15/64 in 15/64 po x2
S2 9.5 mm 3/8in 3/8po x2
x4
x2
x1

S1
S2
1:1

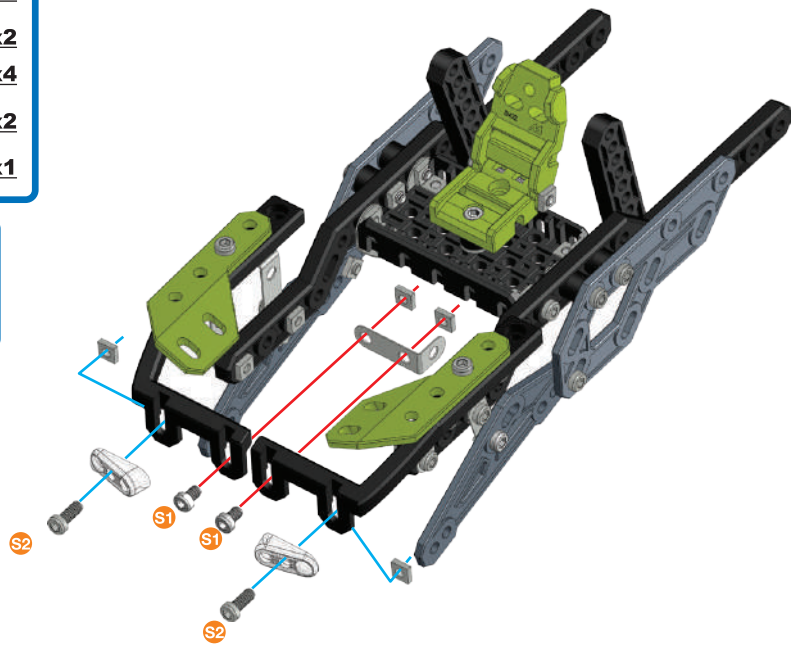

12

S2 9.5 mm 3/8in 3/8po x2
x2
x2

S2 1:1

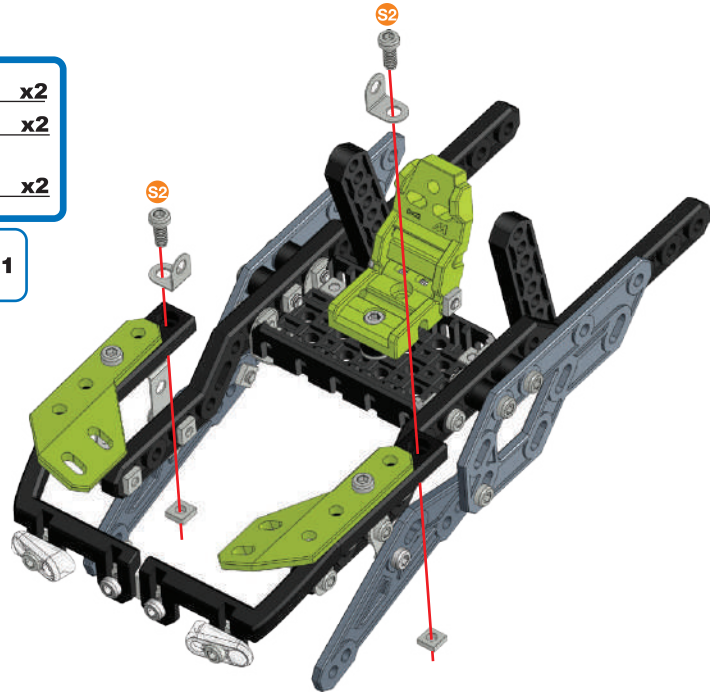

13

S1 5.8 mm 15/64 in 15/64 po x3
x3
x5
x1

S1 1:1

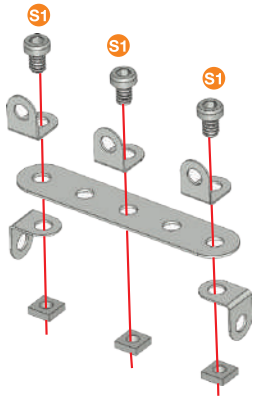

14

S2 9.5 mm 3/8in 3/8po x2
x2
x2

S2 1:1

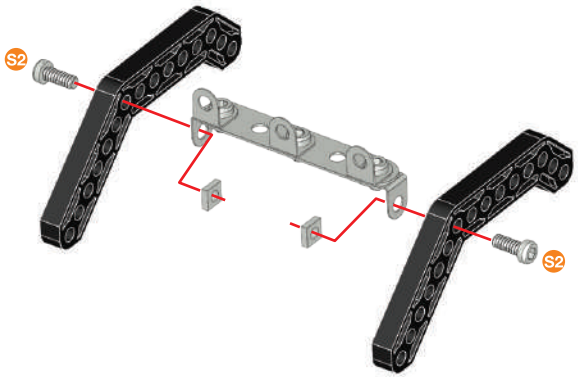

15

⑫+⑭+

S2 9.5 mm 3/8in 3/8po x2

B1 14.7 mm 37/64in 37/64po x2

x4

S2 B1 1:1

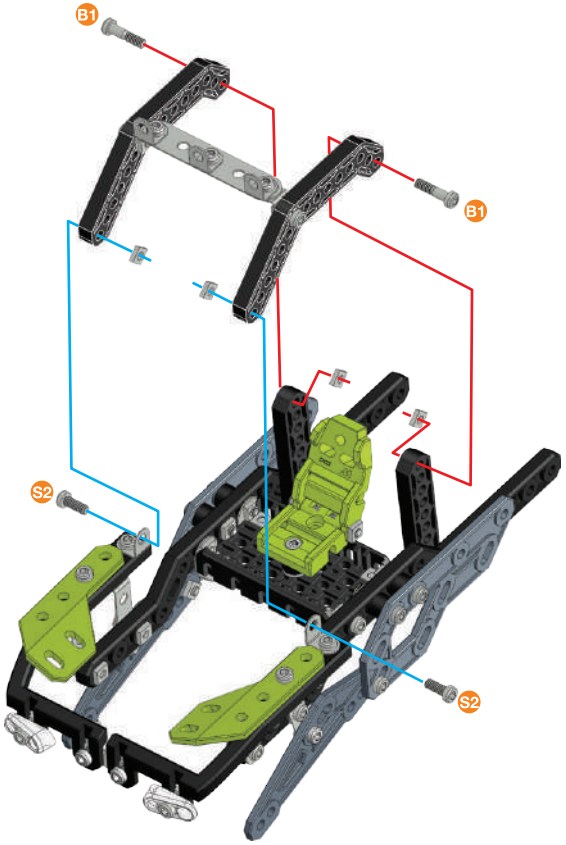

16

S1 5.8 mm 15/64 in 15/64 po x2

x2

x2

x1

S1 1:1

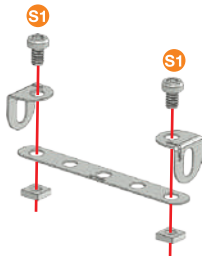

17

S3 12 mm 1/2 in 1/2 po x2

x2

x2

x1

x1

S3 A338 1:1

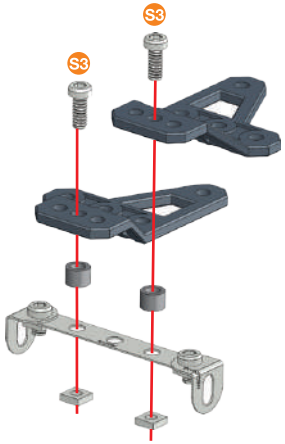

18

S5 25.4 mm 1 in 1 po x2

x2

x4

x2

S5 1:1

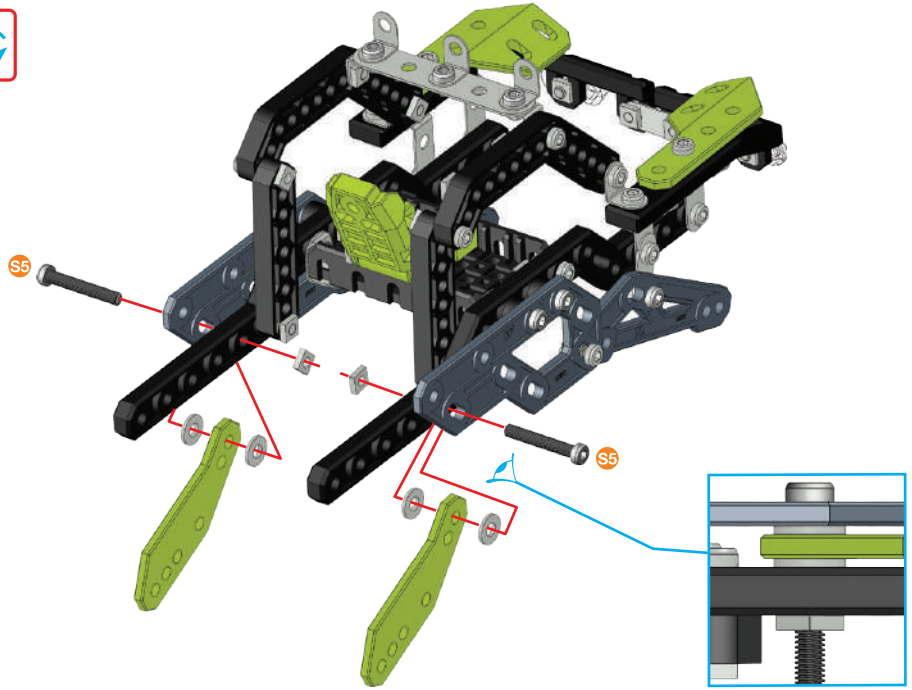

19 ⑰+⑱+

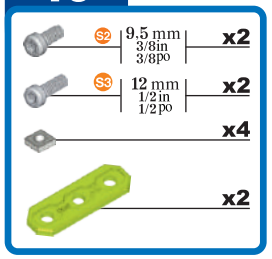
S2
9.5 mm
3/8in
3/8po
x2
S3
12 mm
1/2 in
1/2 po
x2
x4
x2

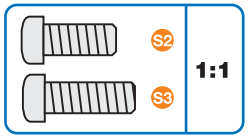
S2
S3
1:1

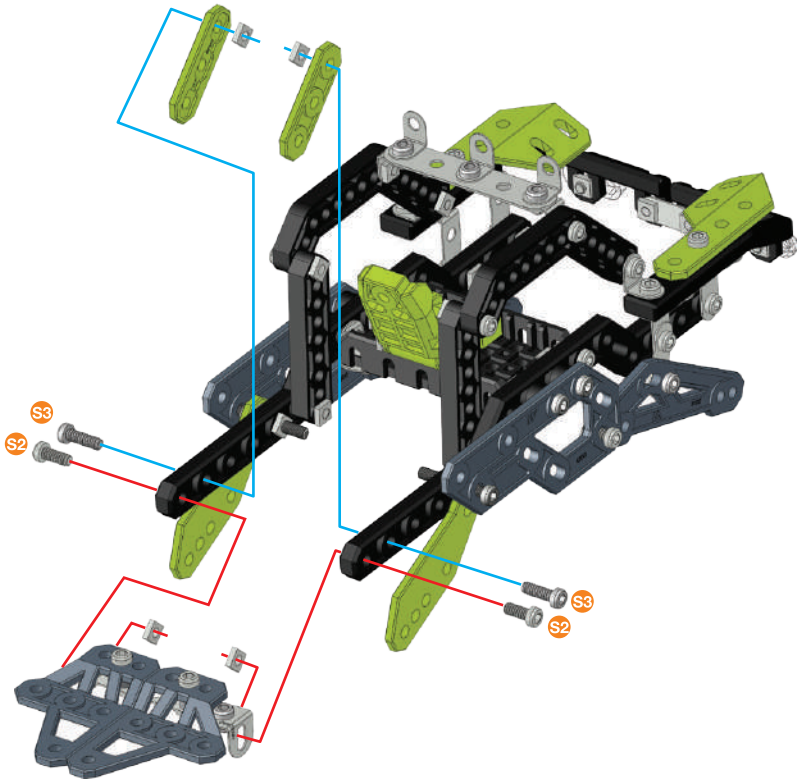
S3
S2
S3
S2

20

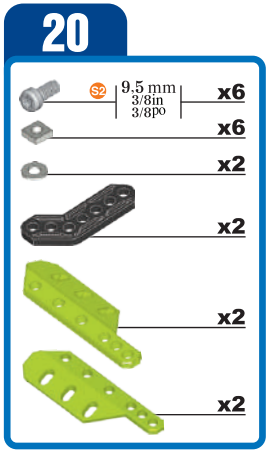
S2
9.5 mm
3/8in
3/8po
x6
x6
x2
x2
x2
x2

S2
1:1

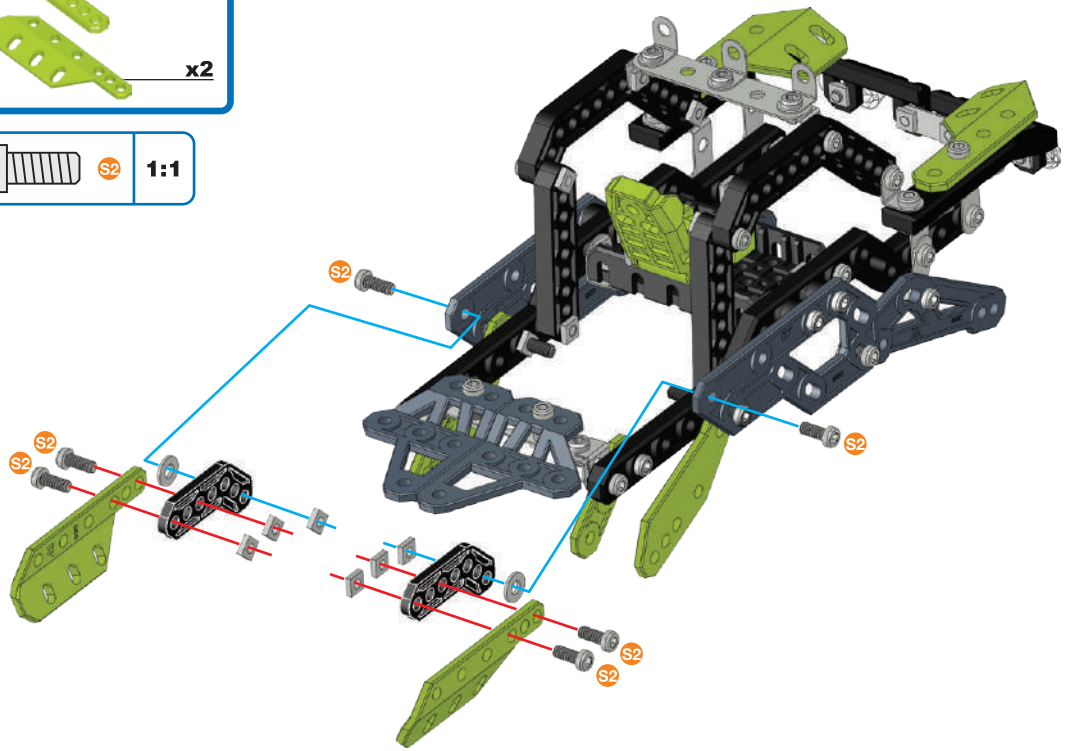
S2
S2
S2
S2
S2
S2

21

S1 5.8 mm 15/64 in 15/64 po x2
S2 9.5 mm 3/8 in 3/8 po x2
x4
x2
x2

S1
S2
1:1

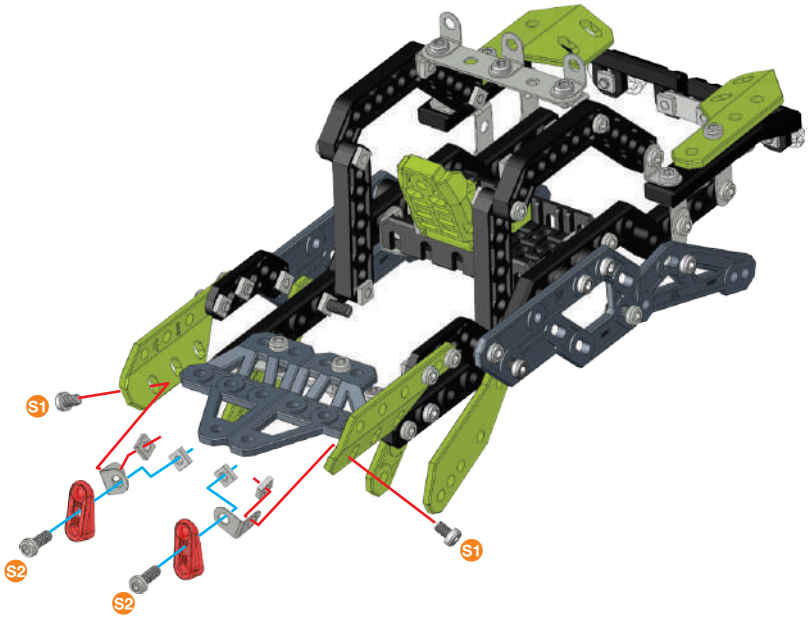

22

x4
x4

x4

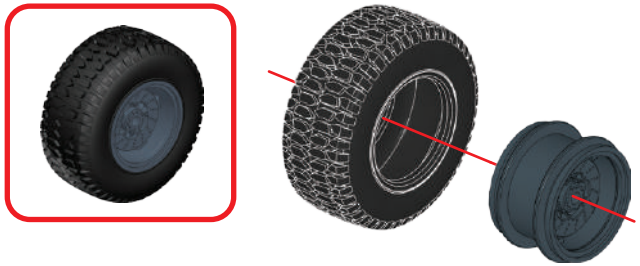

23

21+22+

165 mm 6 1/2 in 6 1/2 po x1
x2
x2
x6

A238 1:1

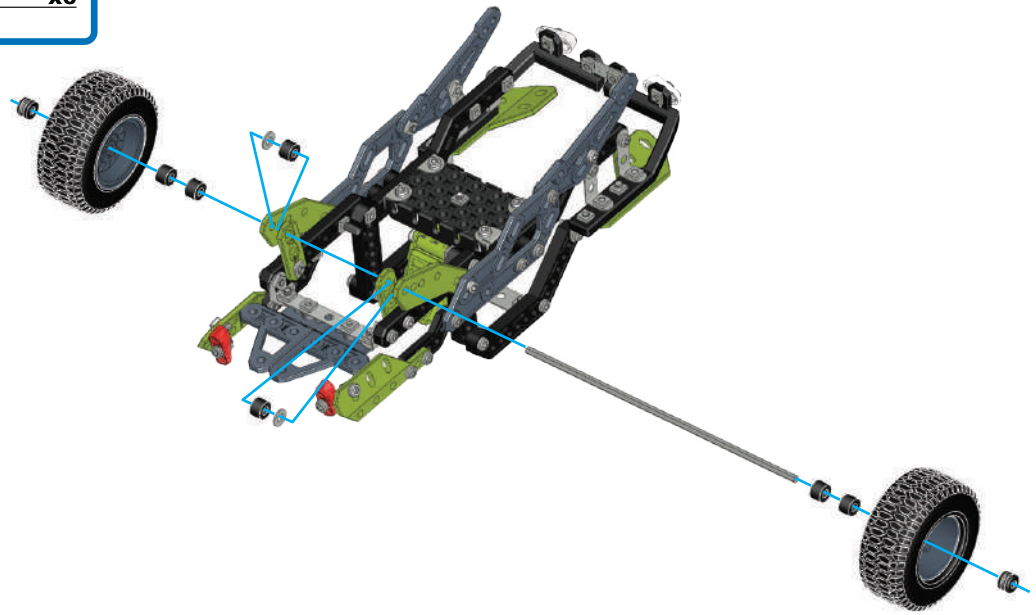

1:1

24 ㉒+㉓+

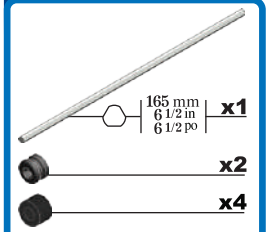

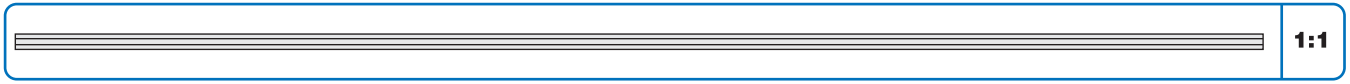

1

- S2 9.5 mm 3/8in 3/8po — x2
- B1 14.7 mm 37/64in 37/64po — x2
- x4
- x1
- x1
- x1

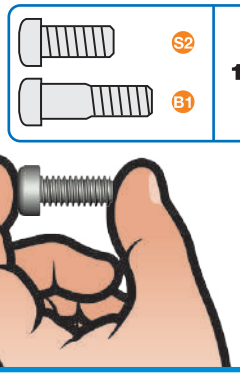

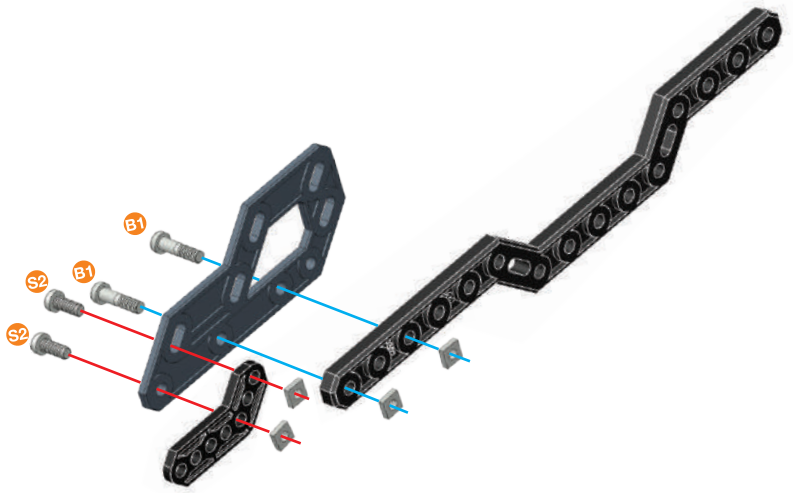

2

- S2 9.5 mm 3/8in 3/8po — x2
- B1 14.7 mm 37/64in 37/64po — x2
- x4
- x1
- x1
- x1

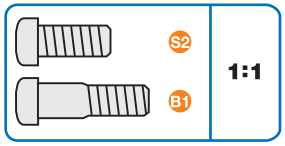

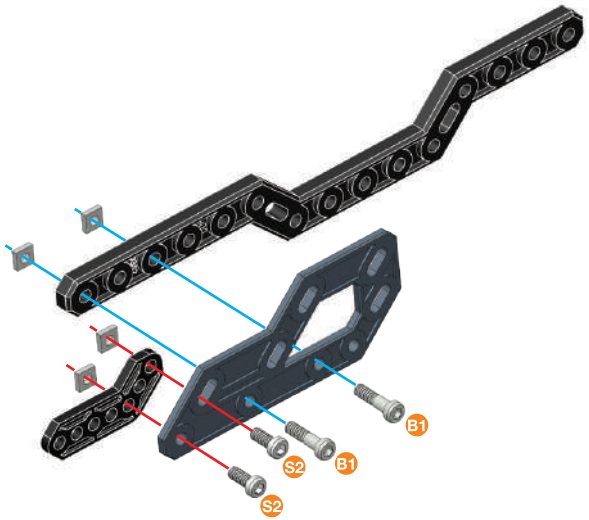

3 ①+②+

- S3 12 mm 1/2in 1/2po — x2
- B1 14.7 mm 37/64in 37/64po — x2
- S4 19 mm 3/4in 3/4po — x2
- x6
- x6
- x2
- x1

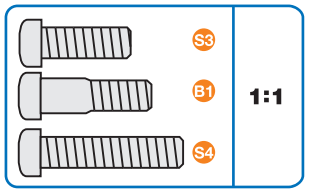

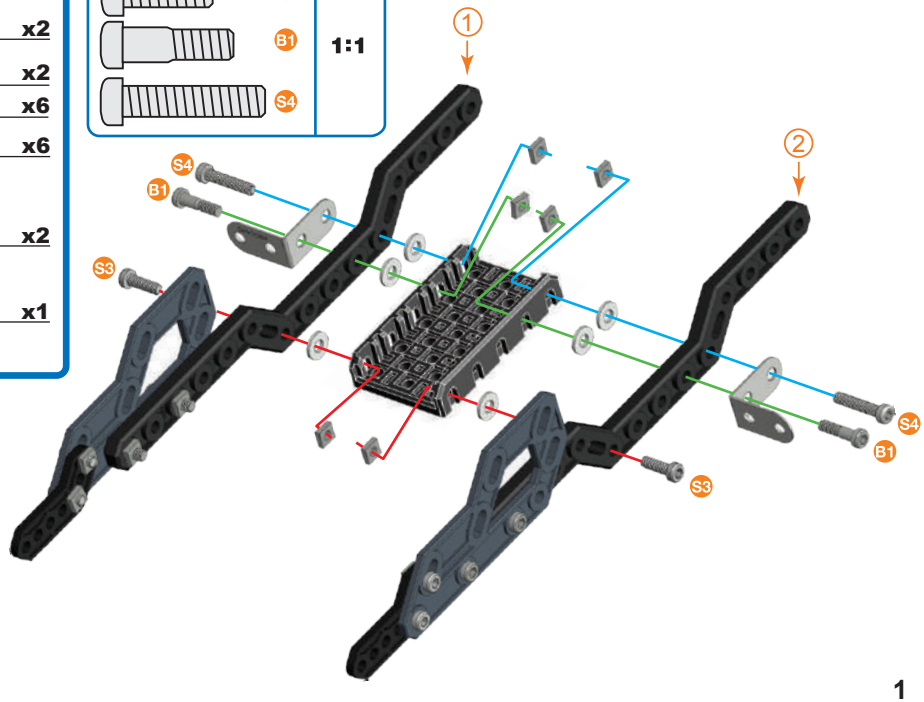

4

S1 5.8 mm 15/64 in 15/64 po x2
S2 9.5 mm 3/8 in 3/8 po x2
x2
x4
x2
x2
x1

S1 S2 1:1

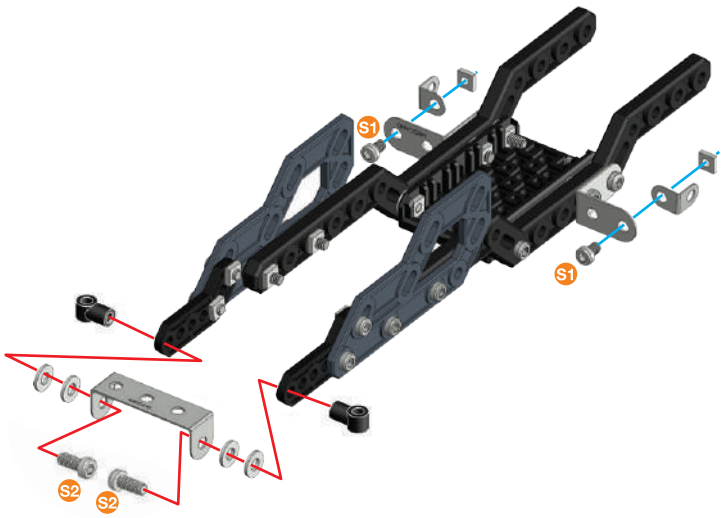

5

S1 5.8 mm 15/64 in 15/64 po x4
x4
x1
x1
x1
x1
x1

S1 1:1

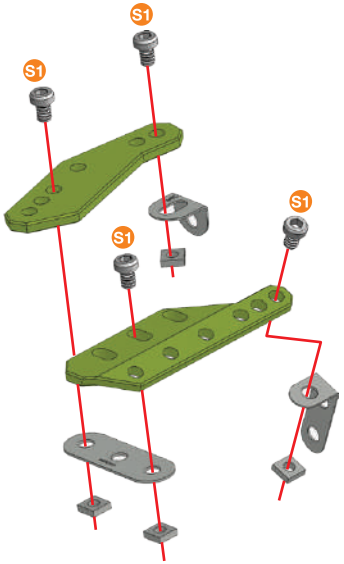

6

S1 5.8 mm 15/64 in 15/64 po x2
x2
x1
x1

S1 1:1

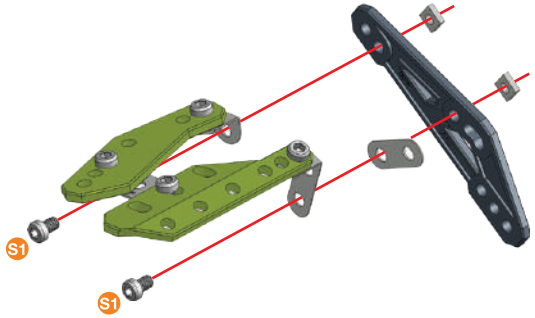

7

S1 5.8 mm 15/64 in 15/64 po x4
x4
x1
x1
x1
x1
x1

S1 1:1

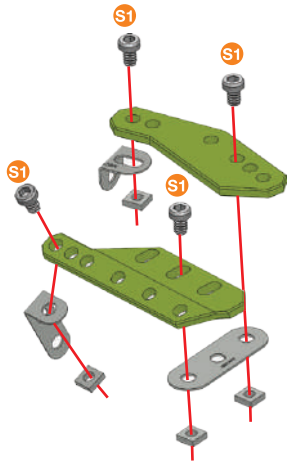

8

S1 | 5.8 mm 15/64 in 15/64 po | x2
x2
x1
x1

S1 1:1

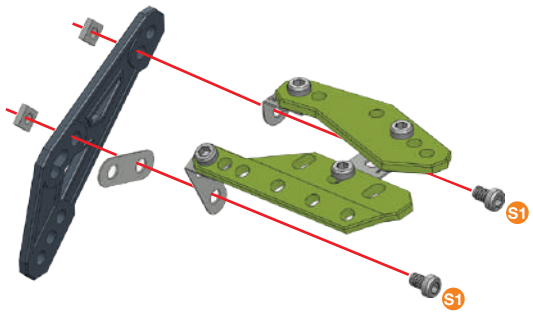

9

④+⑥+⑧+

S3 | 12 mm 1/2 in 1/2 po | x2
x2

S3 1:1

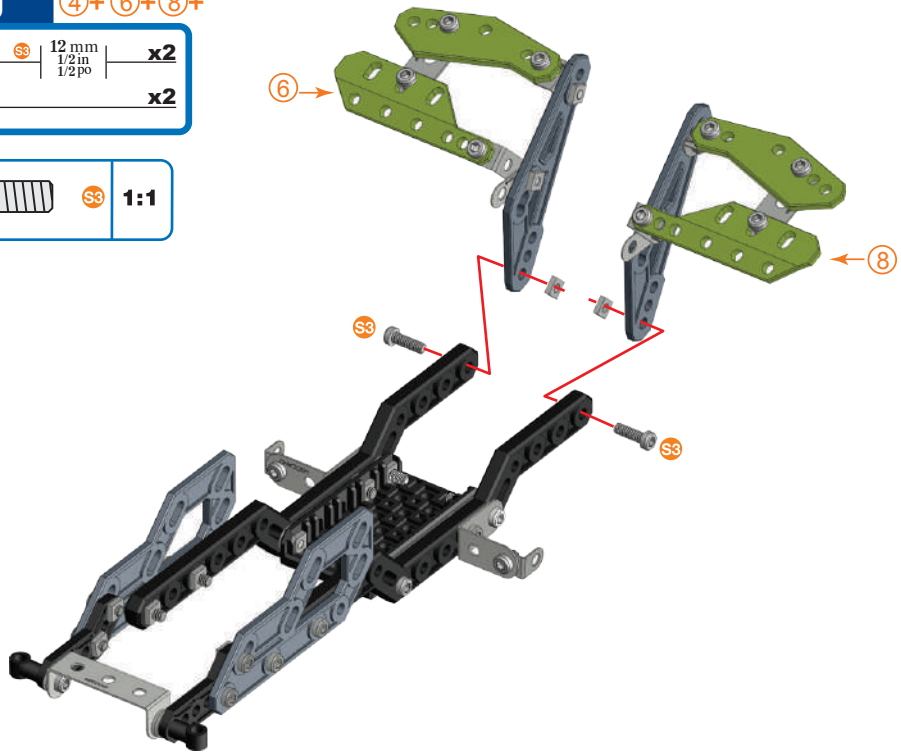

10

S2 | 9.5 mm 3/8 in 3/8 po | x3
x3
x2
x1
x1

S2 A338 1:1

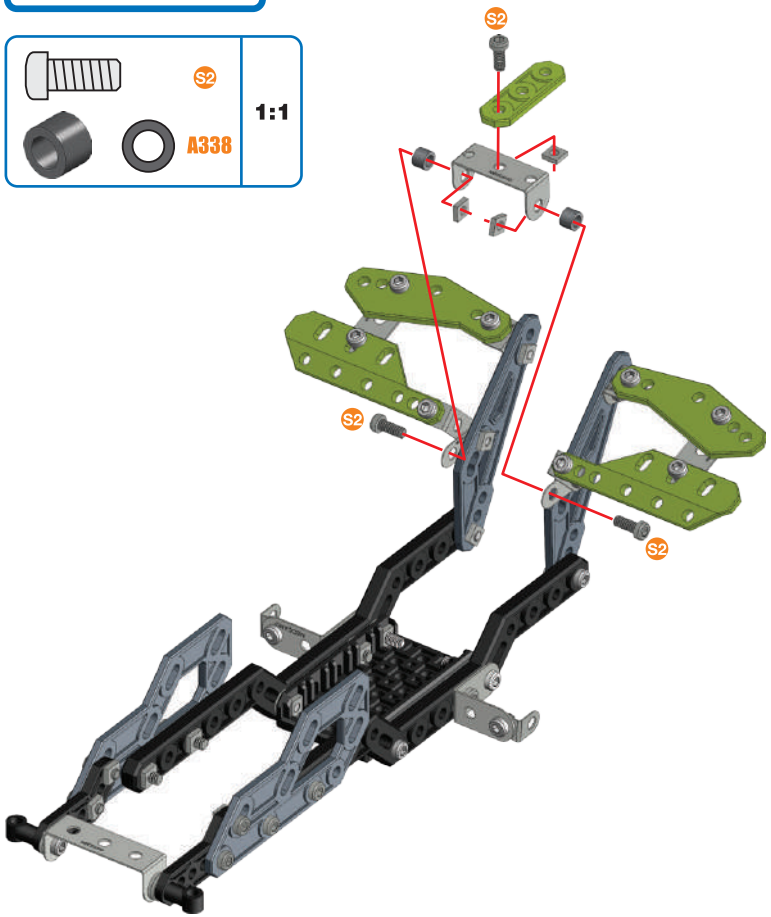

11

S2 9.5 mm 3/8in 3/8po x2

B1 14.7 mm 37/64in 37/64po x2

x4

x1

x1

x2

S2 B1 A338 A238 1:1

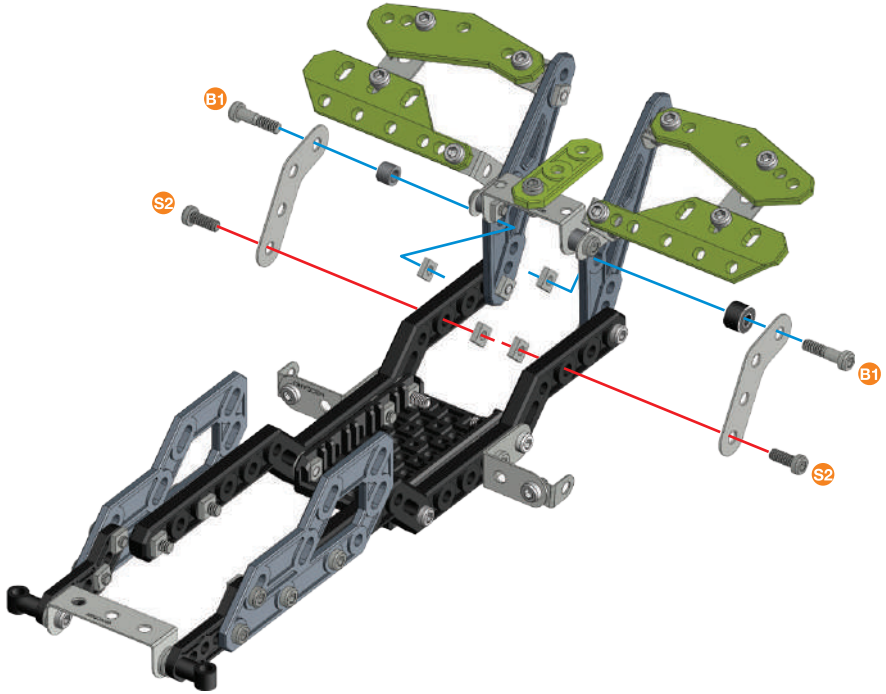

12

S1 5.8 mm 15/64in 15/64po x4

x4

x2

x2

S1 1:1

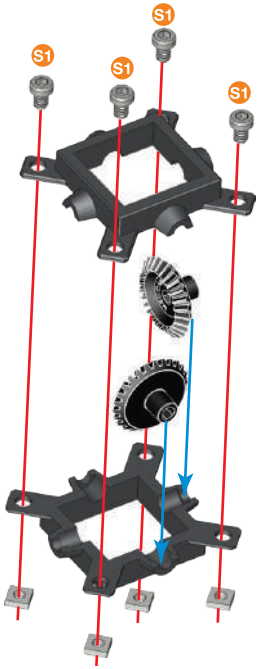

13 ⑪+⑫+

165 mm 6 1/2 in 6 1/2 po x1

1:1

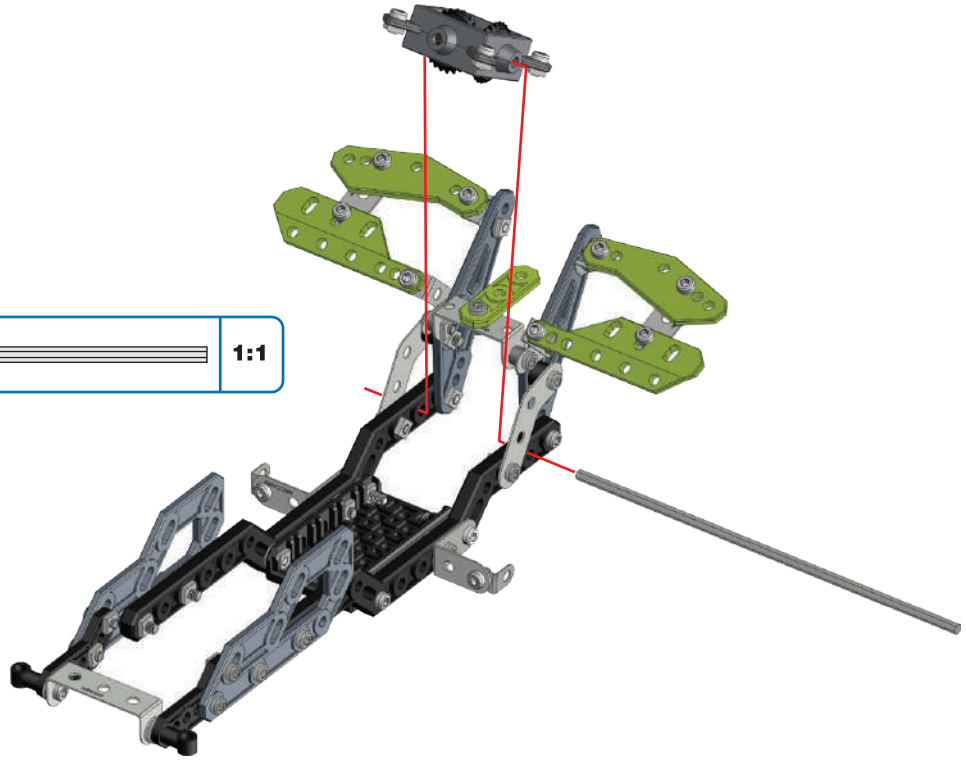

14

S5 | 25.4 mm 1 in 1 po | x1
x1
x1
x2
x1
x1

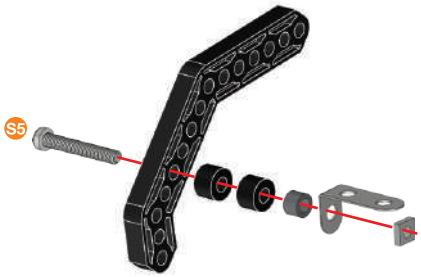

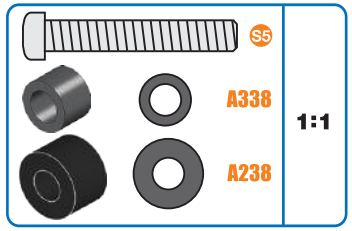

15

S5 | 25.4 mm 1 in 1 po | x1
x1
x1
x2
x1
x1

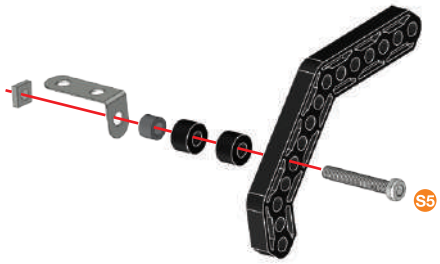

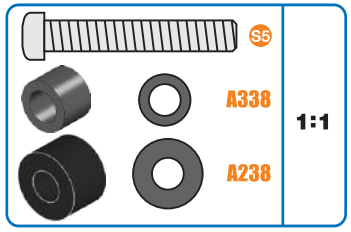

16 (13)+(14)+(15)+

S2 | 9.5 mm 3/8 in 3/8 po | x2
x2

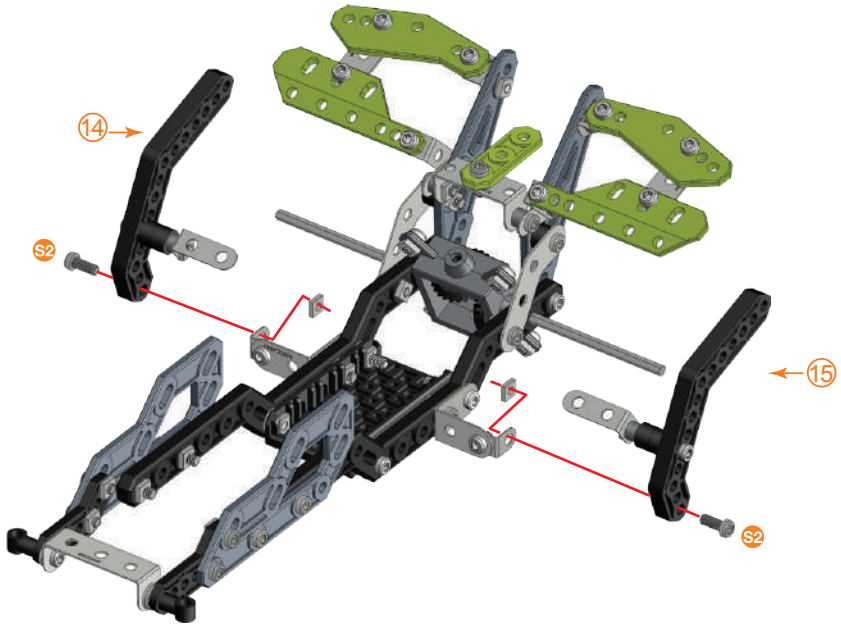

17

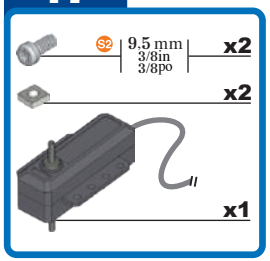
S2
9.5 mm
3/8in
3/8po
x2
x2
x1

S2
1:1

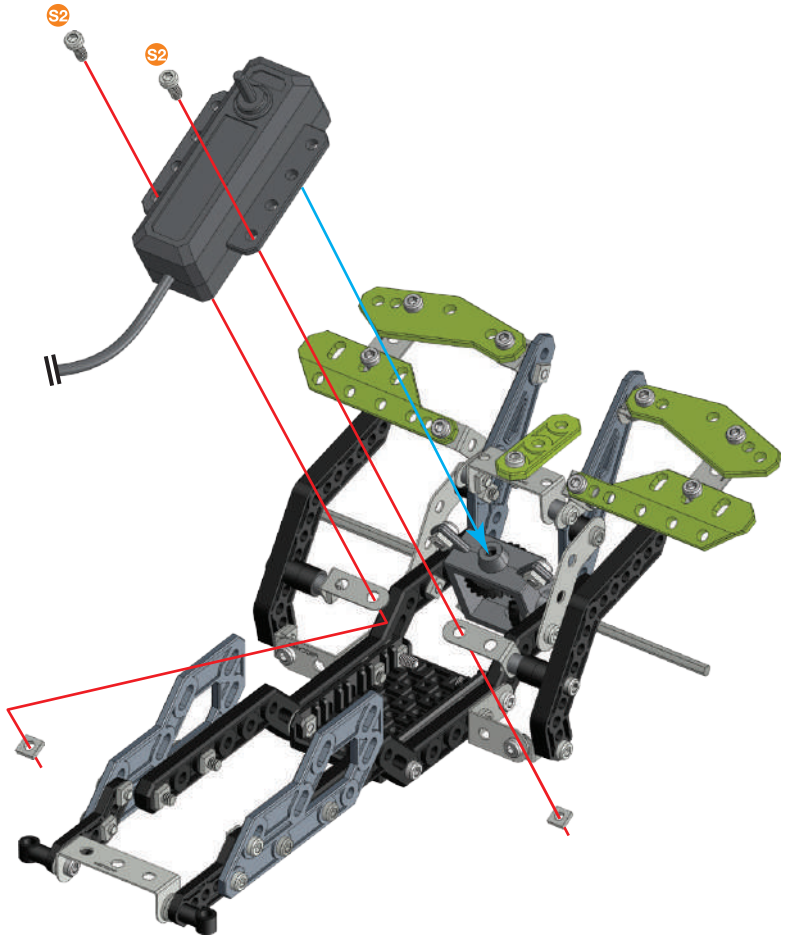
S2
S2

18

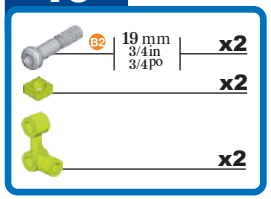
B2
19 mm
3/4in
3/4po
x2
x2
x2

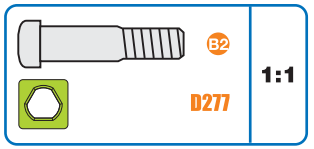
B2
D277
1:1

B2
B2

19

S3 | 12 mm 1/2 in 1/2 po | x2

x2

x1

D277 | S3 | 1:1

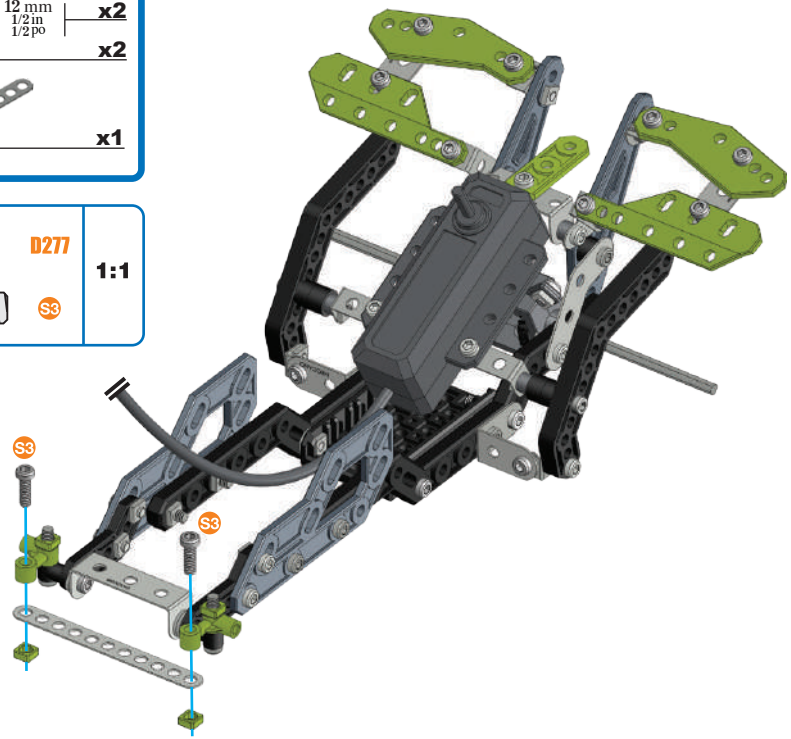

20

S2 | 9.5 mm 3/8 in 3/8 po | x1

B1 | 14.7 mm 37/64 in 37/64 po | x1

x2

x1

x1

x1

x1

S2 | B1 | A238 | 1:1

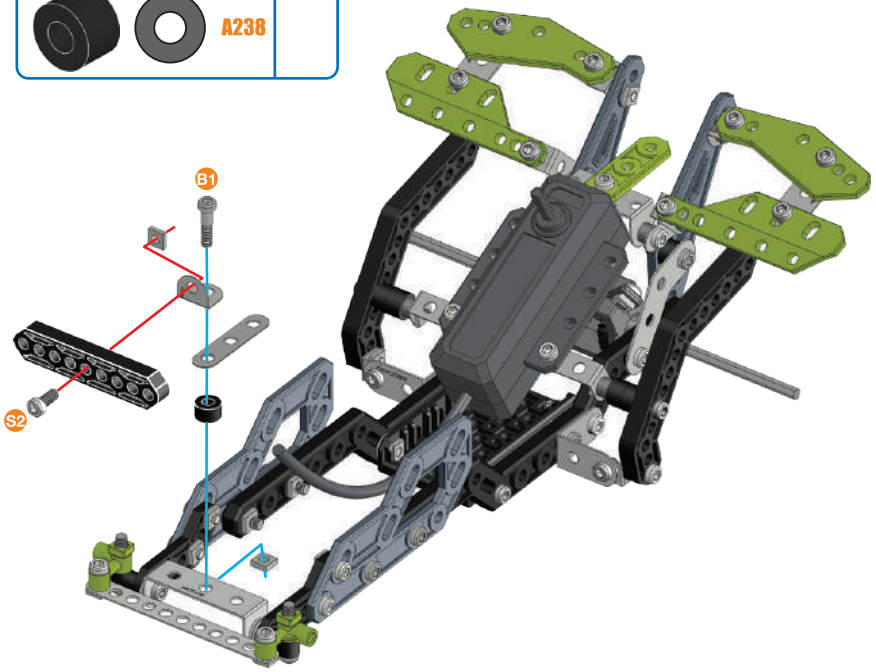

21

S2 | 9.5 mm 3/8 in 3/8 po | x2

x2

x2

x1

S2 | 1:1

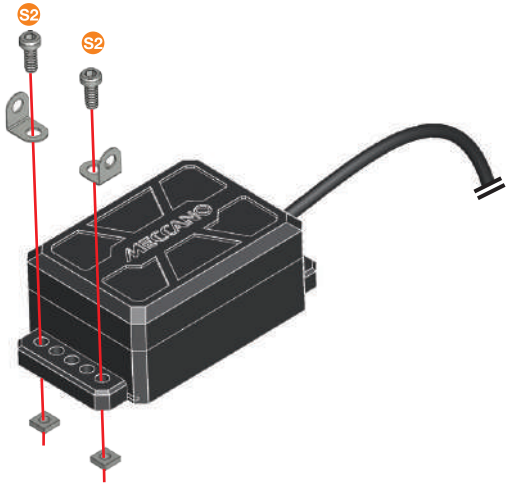

22 ⑳+㉑+

S2 9.5 mm 3/8in 3/8po x1
B1 14.7 mm 37/64in 37/64po x2
x3
x2

S2
B1
A238
1:1

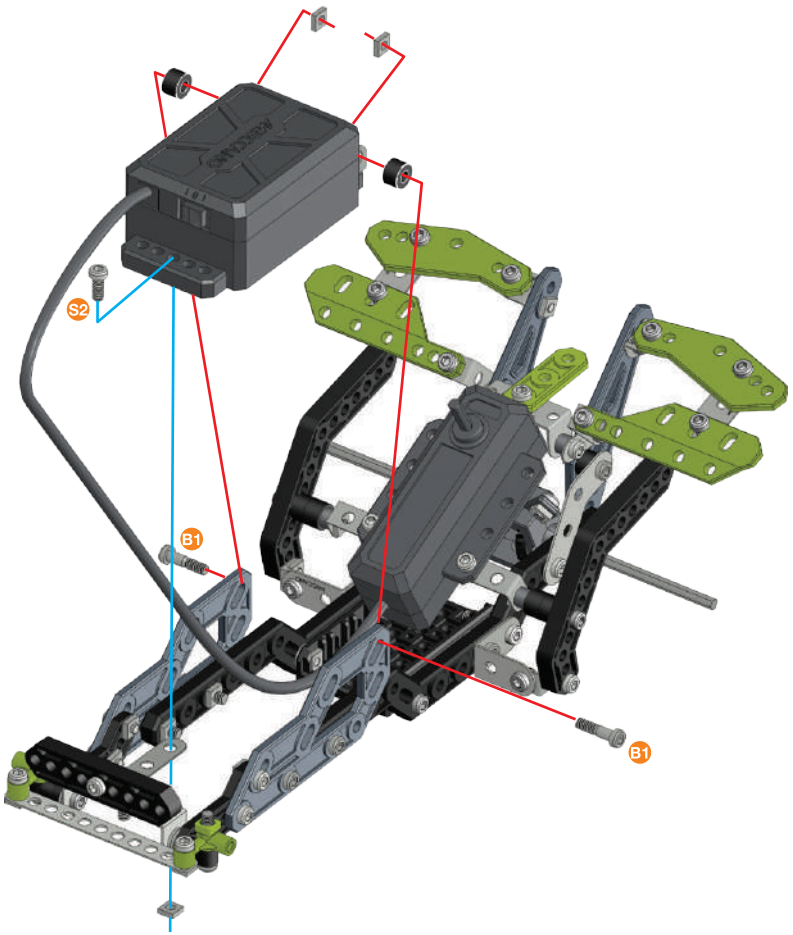

23

S2 9.5 mm 3/8in 3/8po x2
x2

S2 1:1

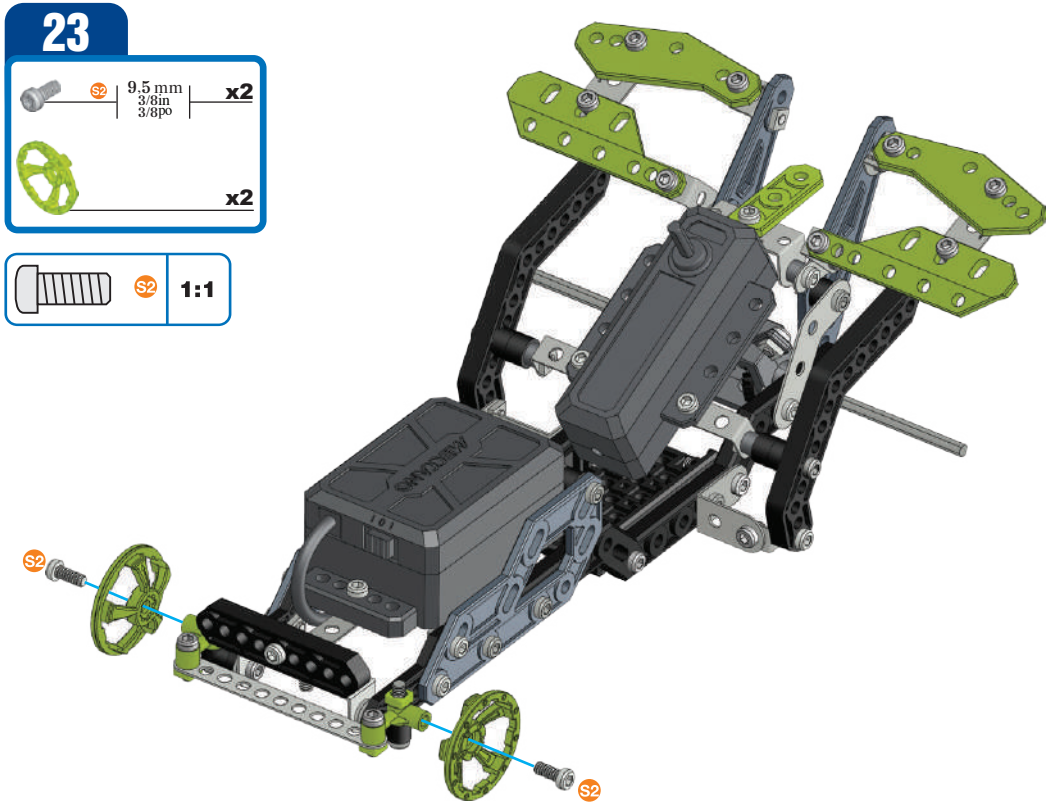

24

x4
x4

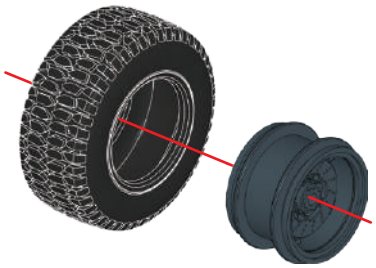

x4

25 ㉓+㉔+

x3
x2
x2
x2

A238 1:1

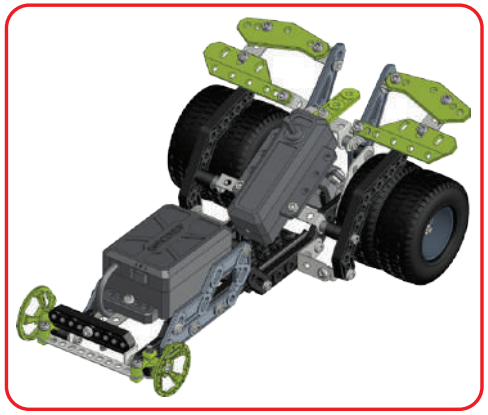

1

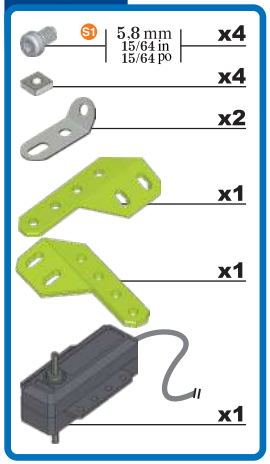
S1
5.8 mm
15/64 in
15/64 po
x4
x4
x2
x1
x1
x1

S1
1:1

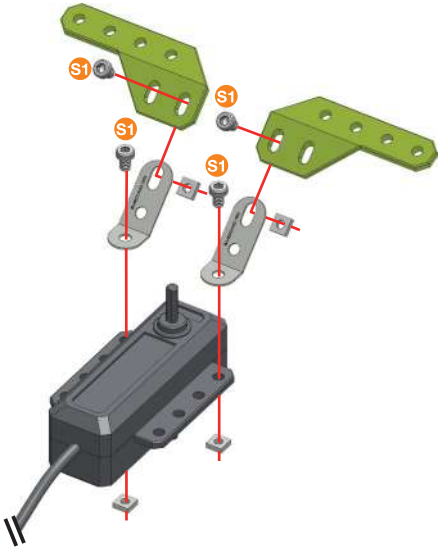
S1
S1
S1
S1

2

S2
9.5 mm
3/8in
3/8po
x4
x4
x1
x1

S2
1:1

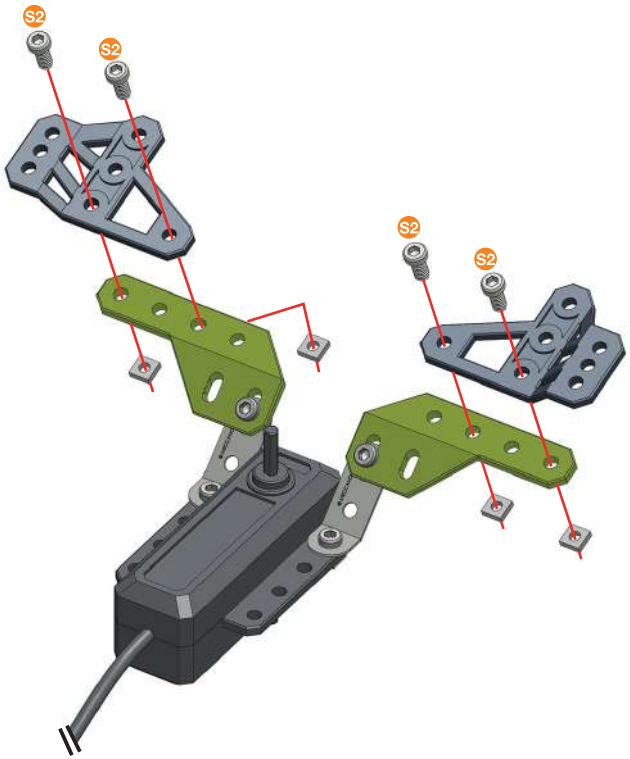
S2
S2
S2
S2
S2

3

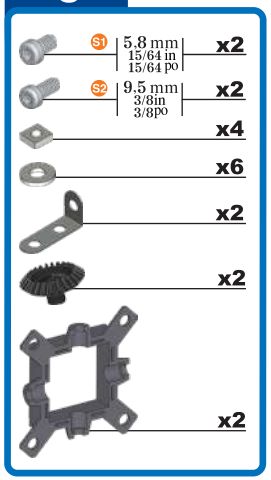
S1
5.8 mm
15/64 in
15/64 po
x2
S2
9.5 mm
3/8in
3/8po
x2
x4
x6
x2
x2
x2

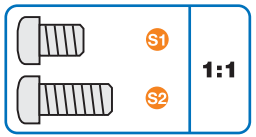
S1
S2
1:1

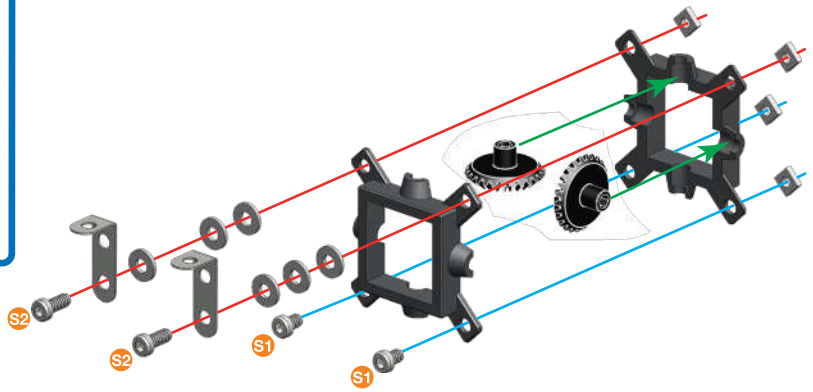
S2
S2
S1
S1

4 ②+③+

S1 | 5.8 mm 15/64 in 15/64 po | x2

x2

S1 | 1:1

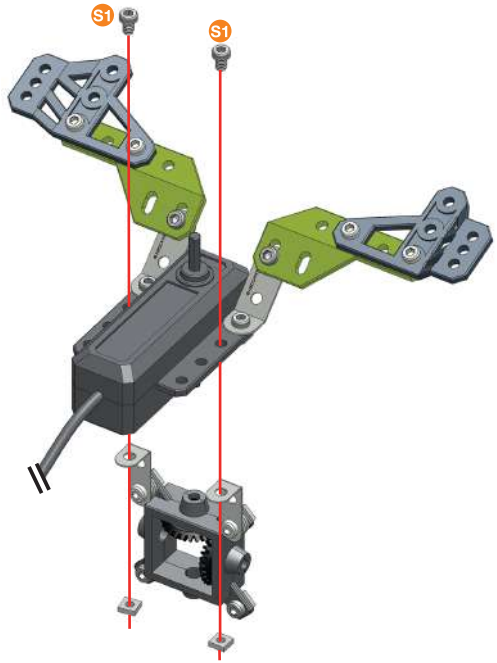

5

S5 | 25.4 mm 1 in 1 po | x2

x2

x2

x4

x2

S5 | A238 | 1:1

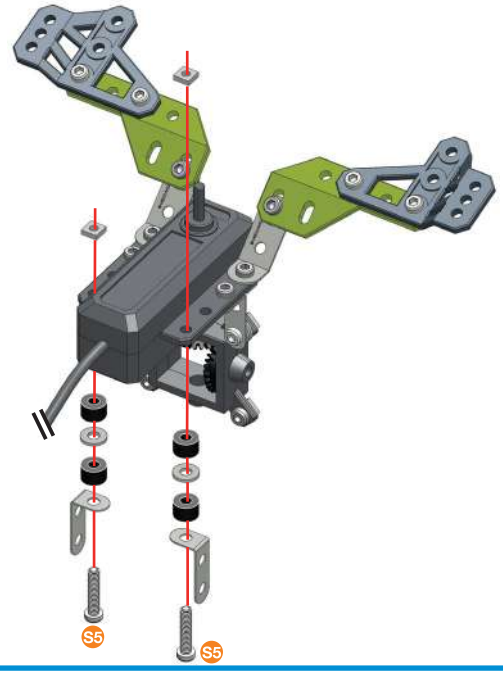

6

B2 | 19 mm 3/4 in 3/4 po | x3

S4 | 19 mm 3/4 in 3/4 po | x1

x4

x4

x1

x2

S4 | B2 | A238 | 1:1

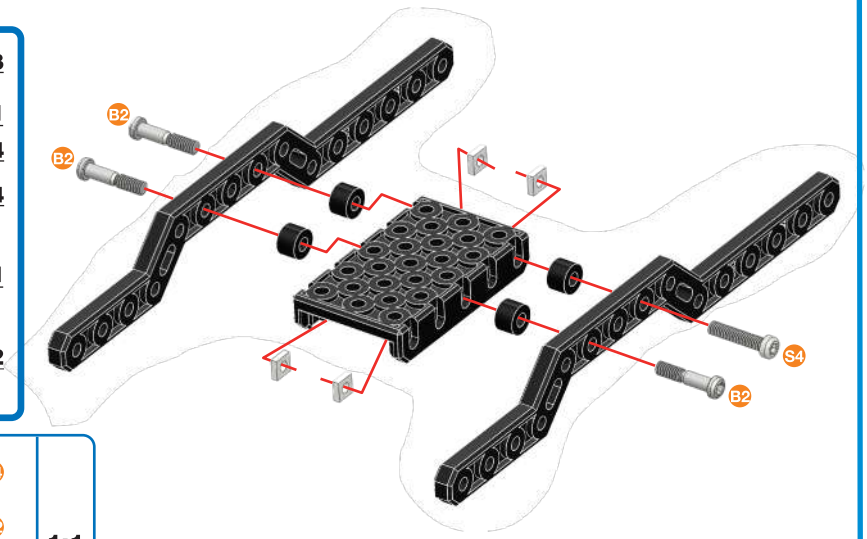

7

S2 | 9.5 mm 3/8 in 3/8 po | x2

S4 | 19 mm 3/4 in 3/4 po | x2

x4

x2

x2

x1

x1

S2 | S4 | A238 | 1:1

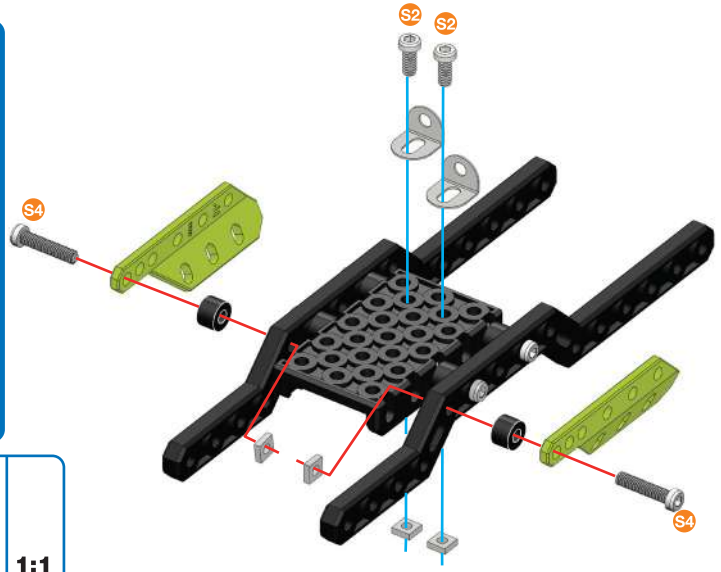

8

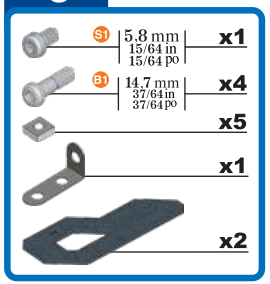
S1
5.8 mm
15/64 in
15/64 po
x1
B1
14.7 mm
37/64 in
37/64 po
x4
x5
x1
x2

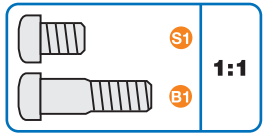
S1
B1
1:1

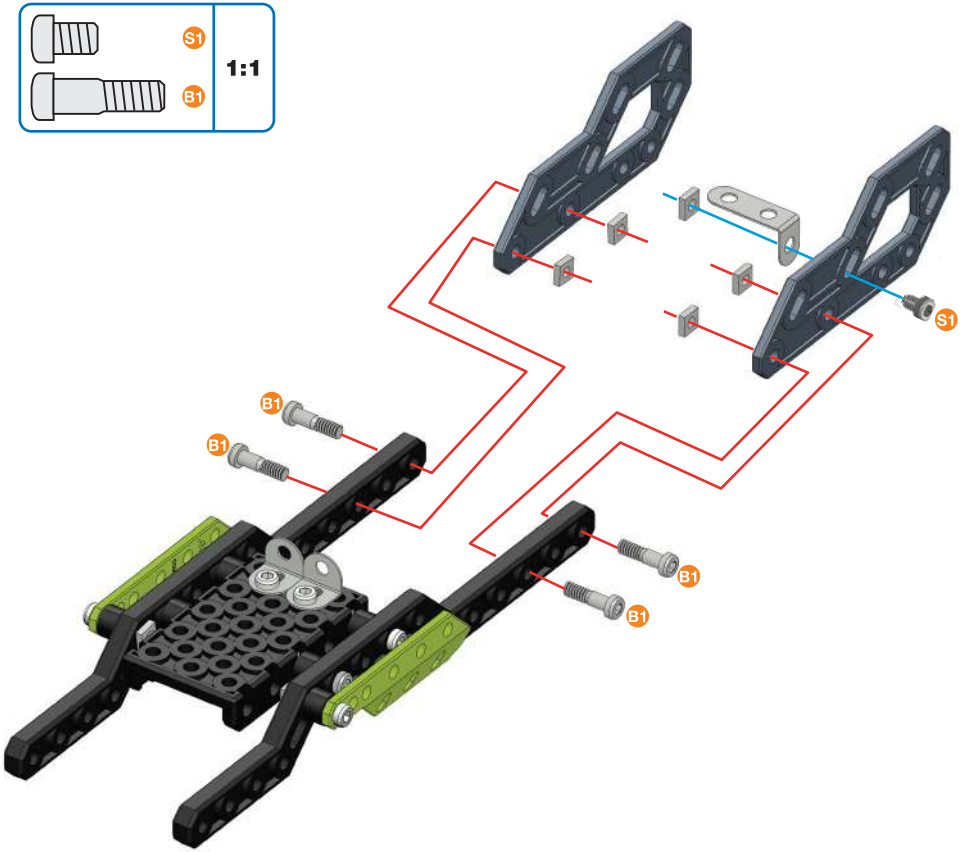
B1
B1
B1
B1
S1

9

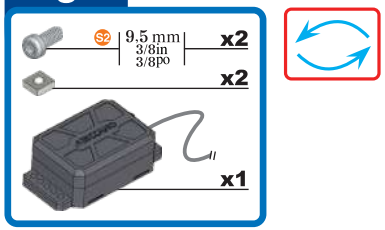
S2
9.5 mm
3/8 in
3/8 po
x2
x2
x1

S2
1:1

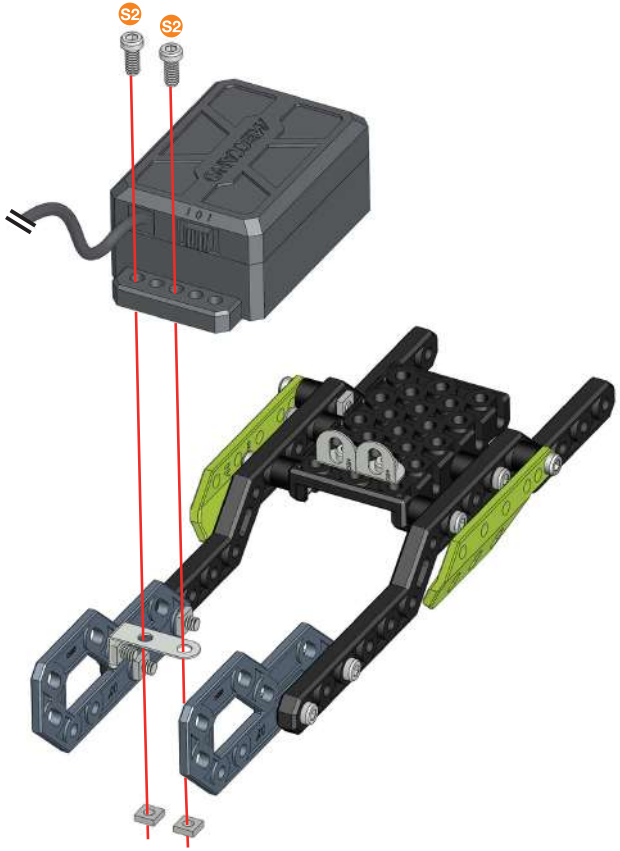
S2
S2

10

S3 12 mm 1/2 in 1/2 po x2
x2
x2
x1
x1

S3
A238
1:1

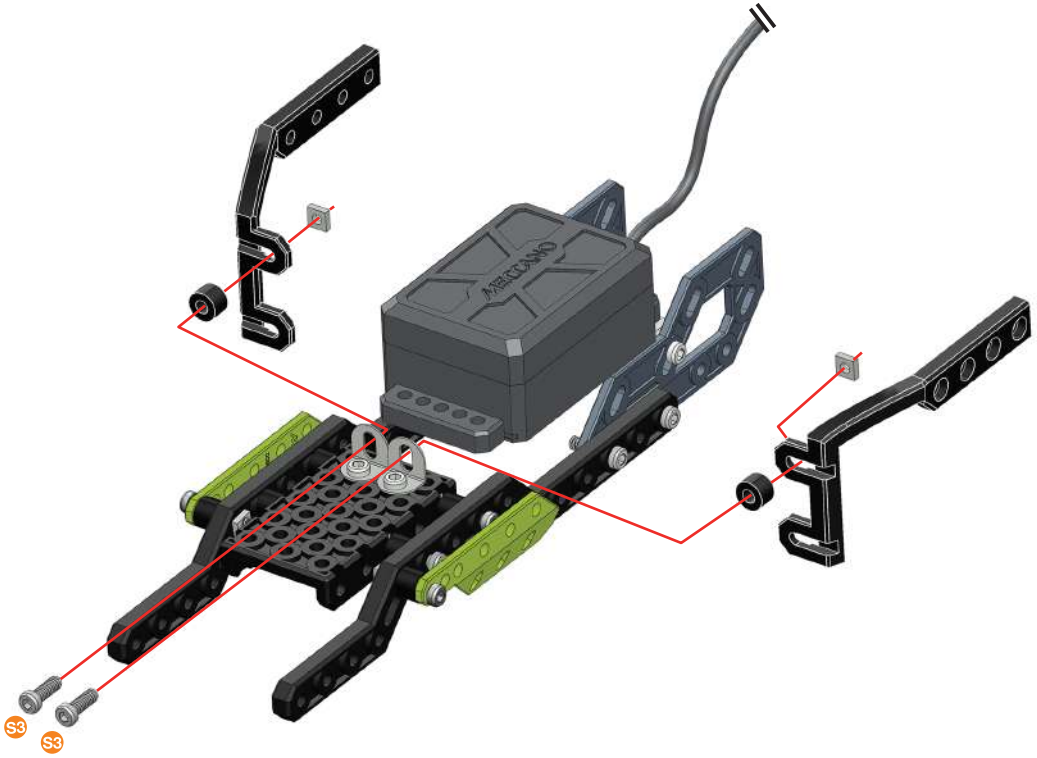

11

S1 5.8 mm 15/64 in 15/64 po x1
B1 14.7 mm 37/64 in 37/64 po x1
x2
x1
x1

S1
B1
A238
1:1

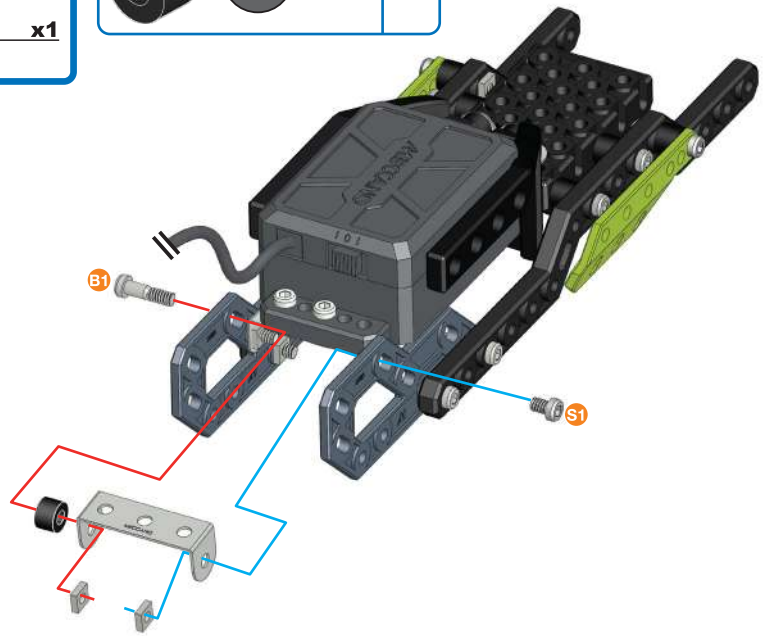

12

S1 5.8 mm 15/64 in 15/64 po x2
x2
x2
x1

S1
1:1

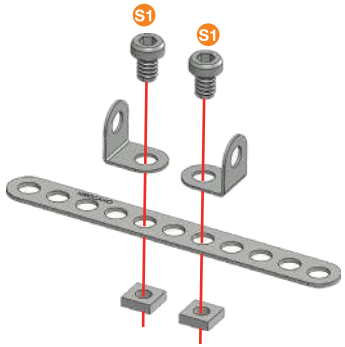

13

S2 | 9.5 mm 3/8in 3/8po | x2

x2

x2

S2 | 1:1

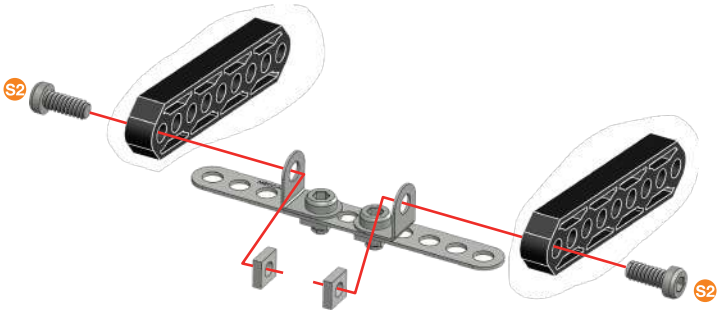

14

S3 | 12 mm 1/2 in 1/2 po | x2

x2

x2

D277

S3 | 1:1

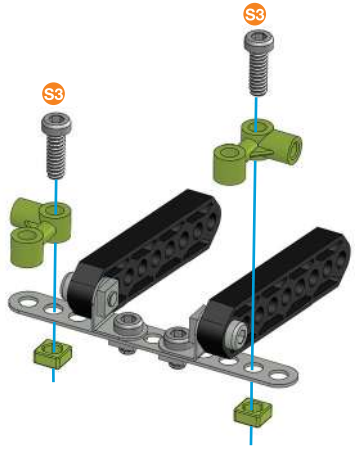

15

S3 | 12 mm 1/2 in 1/2 po | x2

x2

x1

D277

S3 | 1:1

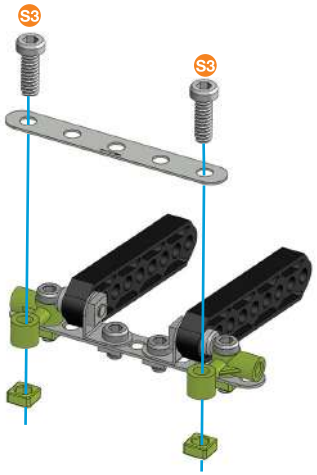

16

S1 | 5.8 mm 15/64 in 15/64 po | x3

x3

x1

S1 | 1:1

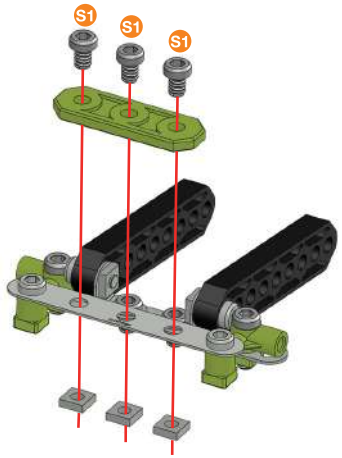

17

B1 | 14.7 mm 37/64 in 37/64 po | x4

x4

x2

B1 | 1:1

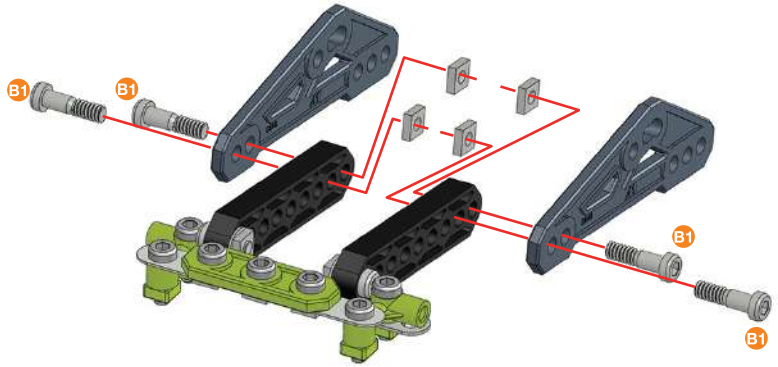

18 ⑪+⑰+

B1 | 14.7 mm 37/64 in 37/64 po | x4

x4

B1 | 1:1

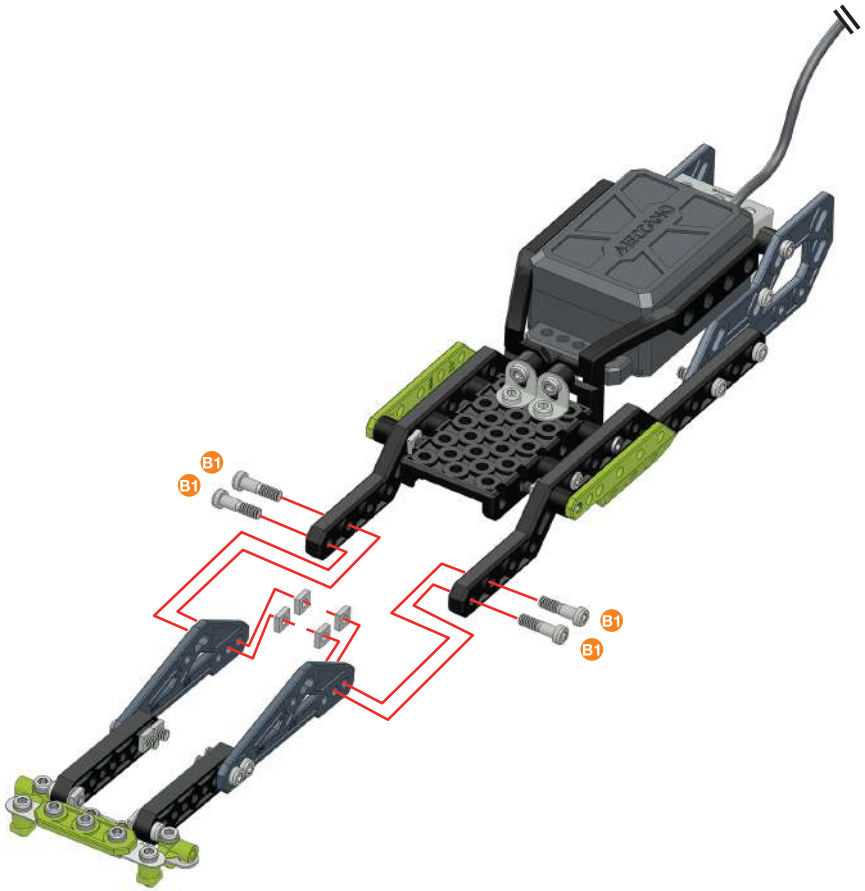

19 ⑤+⑱+

S1 | 5.8 mm 15/64 in 15/64 po | x4

x4

S1 | 1:1

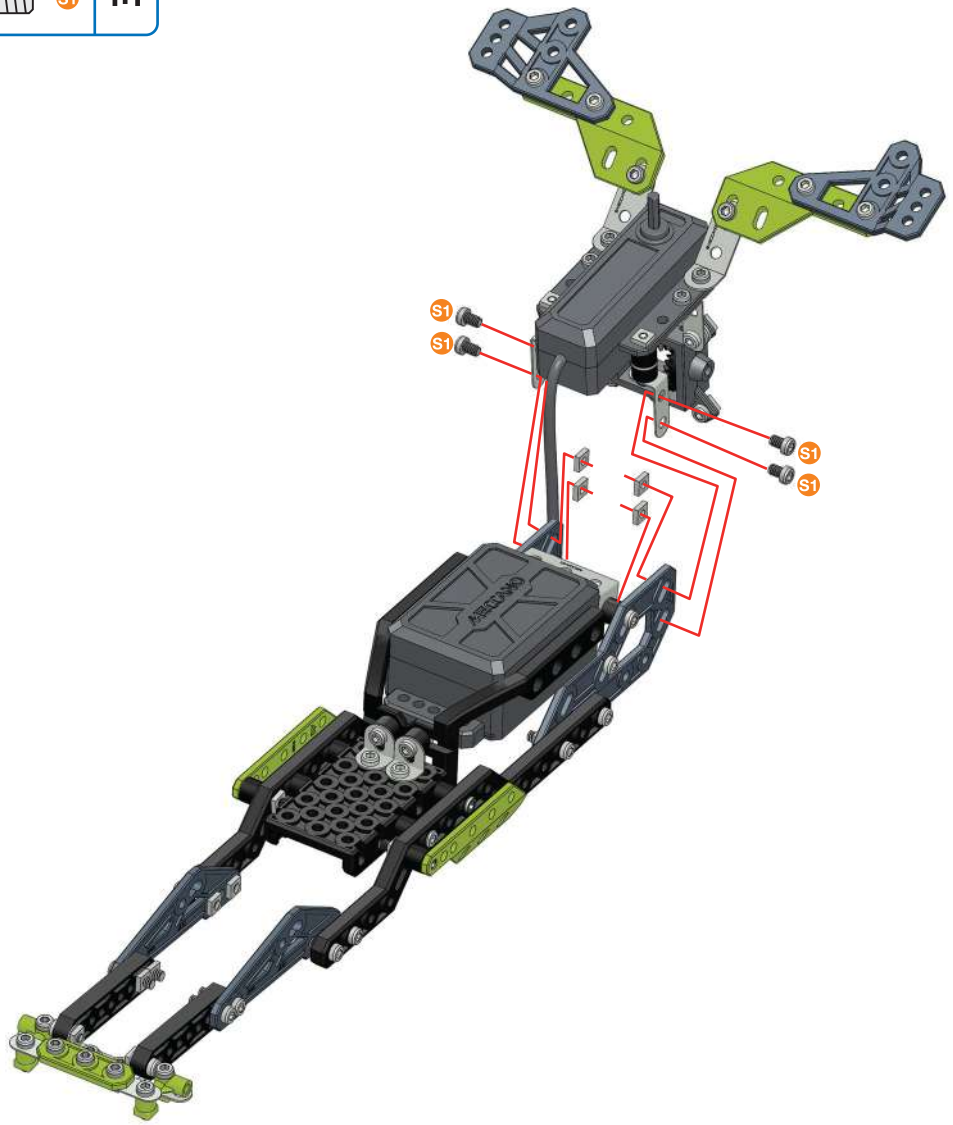

20

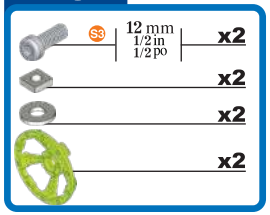

21

x4

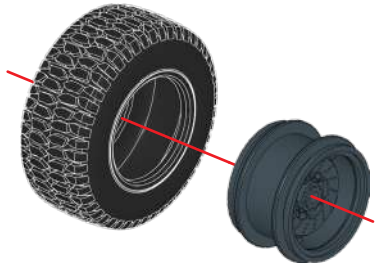

22 ⑳+㉑+

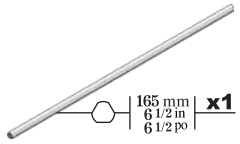

x1

x2

x4

x2

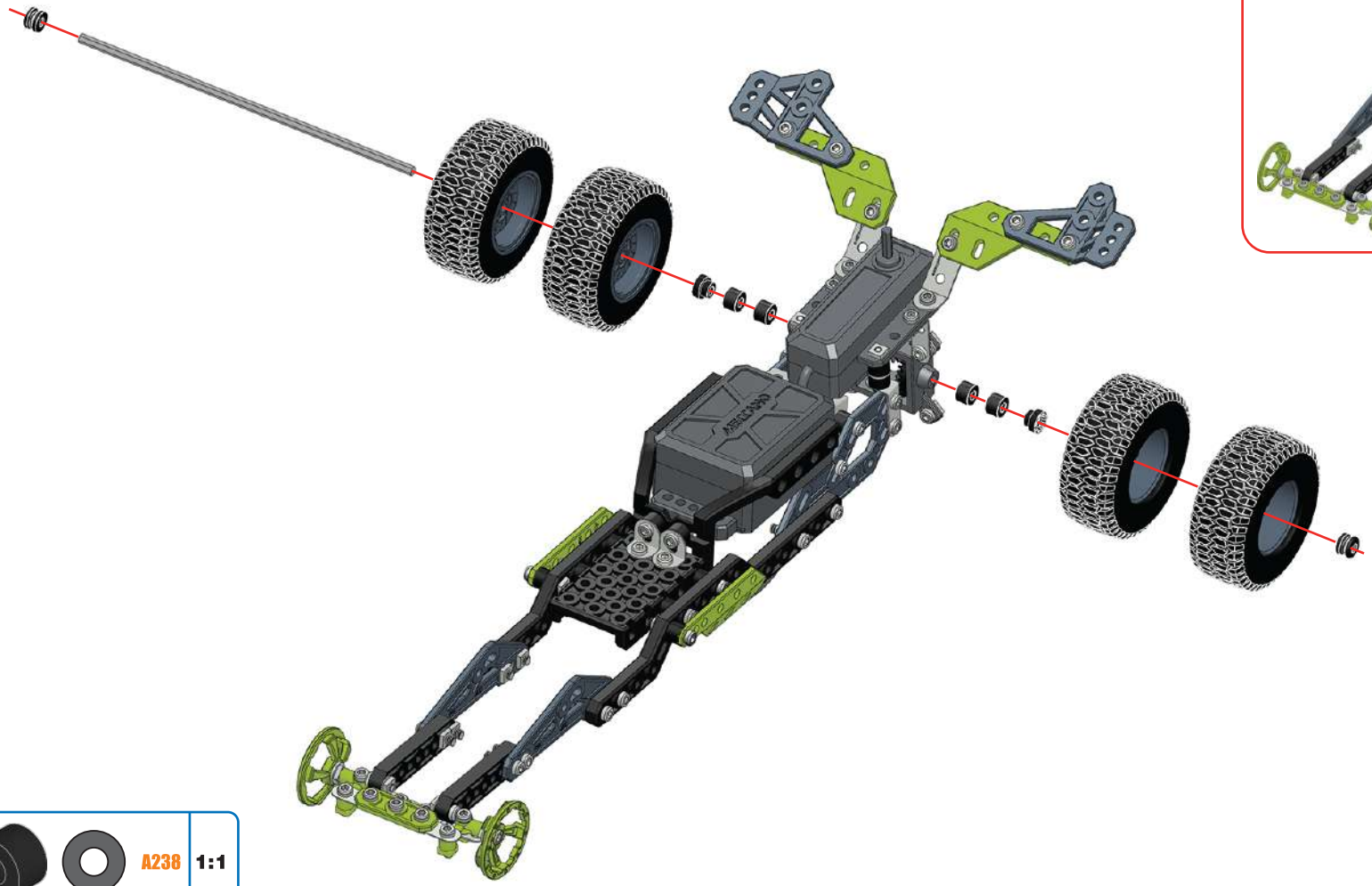

A238 1:1

1:1